larger solution tank, the make-up of water and nutrients is less frequent. The addition of water to a nutrient reservoir can be automated using a float valve.

The next factor to monitor is the pH of the solution. Test it every day and add an acid or base to lower or raise it, respectively. You may test it with an indicator paper similar to that used for fish aquariums (Figure 16.9) or a small hand-held pH meter (Figure 16.10). These products are available at hydroponic stores (see Appendix). You can also purchase "pH Up" and "pH Down" solutions from hydroponic outlets or online (Figure 16.11) as mentioned in Chapter 9.

FIGURE 16.10 "Pen" type portable pH meter. (Courtesy of Milwaukee Instruments, Rocky Mount, North Carolina.)

FIGURE 16.11 pH Up and pH Down solutions. (Courtesy of General Hydroponics, Sebastopol, California.)

OXYGENATION OF SOLUTION

This applies mainly to water culture systems. It is, however, helpful for all hydroponic systems to oxygenate the nutrient solution in the solution tank. Achieve this with an air pump and some air stones. These can be acquired from an aquarium shop or online (see Appendix). Place the air stone(s) in the nutrient reservoir connected by poly tubing to the air pump. Keep the air pump elevated above the level of the tank to prevent any possible damage to the pump by water returning to the pump, should the power fail. For raft culture, place a series of air stones along the bottom of the raceway. Connect with poly tubing the air diffusers to an air pump. Many sizes and types of air pumps from linear piston air pumps to diaphragm pumps are available from fish culture suppliers such as Aquatic Eco-Systems, Inc. (www.AquaticEco.com). They also sell tubing, fittings, and diffuser air stones.

Controlling all of these environmental factors at optimum levels will assist in the success of growing hydroponically. Hydroponic culture enables the grower to maximize production and quality. If one or more environmental factors are not at optimum level for the crop, the ability for hydroponics to maximize quality and yield will be restricted.

Section V

Year-Round Growing in Greenhouses

17 The Greenhouse Environment for Plants

LIGHT

A hydroponic backyard greenhouse has more optimum environmental control than in a spare room or basement of your home. One of the greatest limiting factors of indoor home growing is the quality and quantity of light that can be provided by supplementary artificial lighting. The greenhouse uses natural light, and hence benefits greatly from natural sunlight having the quality and quantity of light under which plants evolved. Supplementary artificial lighting is added for winter months to increase light intensity under cloudy conditions and to extend day length during the short days from mid-November through mid-March.

The most common lights to use for this purpose are cool-white fluorescent and high-intensity discharge (HID) lights as mentioned in Chapter 16. The measurement of light intensity in the photosynthetically active radiation was explained in Chapter 5. The amount of light units depends upon the total area of the greenhouse. For example, a 10½ ft × 12 ft greenhouse would need three 8-ft high-output cool-white fluorescent lights, one placed above each bed of plants or six 4-ft T5 fluorescent lights. A 10½ ft wide greenhouse would fit three hydroponic beds. This is a total area of 126 ft^2. Two 600-watt HID lights would provide ample light for this size of greenhouse. They would give about 550 ft candles of light intensity. Mount them a few feet under the roof of the greenhouse above the aisles between the plant beds to get maximum light distribution. They should have horizontal reflectors. Several compound light emitting diode (LED) lights could be used to save electrical consumption, but the initial cost is higher than other light sources. LED lights are available as 4-ft fixtures with either four or eight lamps. The lights can be mixed with red and blue tubes. You would need at least four 4-ft fixtures at a cost of approximately $200 each. Compact fluorescent lights are also available with red and blue mixed lamps in a reflective fixture. The lamps are available in 125-watt, 200-watt, and 300-watt sizes. The lamps and fixtures cost about $100–200 each depending upon their wattage. For a greenhouse of 126 ft^2, at least four 300-watt or six 200-watt units would be needed.

To calculate the amount of lights for a specific area, use a base of 50–70 watts per square foot of growing area. For a 126 ft^2 greenhouse, the actual growing beds would be two beds 2 ft × 12 ft and one bed 9 ft × 2 ft. The total growing area is $2 (2 \times 12) + 1 (2 \times 9) = 48 + 18 = 66$ ft^2. You would need 66 × 50 watts = 3300 watts. This calculation, however, is for a dark room without natural light; hence, a little less than half of the wattage (1200–1500 watts) would be sufficient for a greenhouse.

TEMPERATURE

Temperature fluctuations in a greenhouse are dependent upon the outside weather conditions, unlike indoor gardening in a house with insulation. The covering of the greenhouse determines how much insulation capacity it has. However, keep in mind that light is extremely important so choose a material that has good light transmission. Common covering materials include glass, polyethylene, and polycarbonate. A double layer of polyethylene will provide more insulation than glass. Polycarbonate is available in various laminates. Double and triple layers are available to reduce heat loss. It also comes in corrugated, but that has less insulation capacity than the double or triple layers. Several disadvantages to polyethylene covering are that even with a special greenhouse film with polymers to reduce ultra violet breakdown, it will last only 3 or 4 years before replacement. Double polyethylene has an advantage of saving energy loss due to a dead air space between the two layers of film, but the disadvantage is the loss of light due to the two layers. This may be as much as 20% or more with aging of the film. Polyethylene covering also does not have the aesthetic appearance of glass or polycarbonate.

Temperature control includes heating and cooling. Due to the "greenhouse effect" as light enters a greenhouse, its wavelength is changed and the heat cannot escape, so there is a heat build-up within the greenhouse under sunlight conditions. When it is cloudy this does not occur. Even during winter months, a very bright sunny day will cause temperatures in the greenhouse to rise above optimum and then some ventilation is needed. During summer months, cooling is a key factor to maintain optimum temperatures during the day when it is sunny. This is achieved by the use of exhaust fans and, if necessary, cooling pads. In backyard hobby greenhouse due to their small area, normally exhaust fans are adequate without cooling pads, unless you are located in a very hot area with desert conditions.

Heating is needed during cool seasons during the days and nights when sunlight is not present. The best form of heat is by use of a boiler and hot water heating pipes at floor level. However, this is not economically feasible with small greenhouses and therefore space heaters are used. The best type of space heater is a unit heater mounted near the ceiling of the greenhouse, but these types of heaters are much more expensive than free-standing space heaters. The most common are electrical and gas- or propane-fired models. If you wish to use an electrical space heater, purchase a 220-volt one that is more energy efficient than a 110-volt one. There are also propane heaters that are located remote from the propane cylinder or others that are mounted on top of the cylinder. More details on heaters, calculations of sizes needed to meet temperature differentials, exhaust fans, covering materials, and so on are given in Chapter 21 on "Components for Backyard Greenhouses."

CARBON DIOXIDE ENRICHMENT

As discussed in Chapter 16, carbon dioxide (CO_2) enrichment increases production for all greenhouse crops by up to about 20%. Small CO_2 generators were discussed in that chapter. I recommend using the same generators as you would for indoor culture for a backyard, hobby greenhouse. However, whenever the greenhouse is ventilating,

especially in high-light, late-spring to early-fall periods, a CO_2 generator would not be needed and in fact would waste fuel during that time. Under cloudy weather the CO_2 enrichment is very beneficial, so at that time have the generator operating, but only during the day period, not at night. If you use a propane-fired heater, it will naturally generate CO_2, so the need for an additional CO_2 generator is unnecessary.

RELATIVE HUMIDITY

Optimum relative humidity is about 75% for most plants. High humidity in the greenhouse during cloudy, dull, wet, weather is the main concern. If plants appear moist on their leaves, the best method to reduce the humidity is to heat and exhaust some of the heated air to exchange the air with drier air. Even if it is raining outside and the relative humidity is 100%, normally during such clement weather the ambient temperatures will be low, so heating of the greenhouse air is taking place. As the heater raises the incoming colder air, the humidity will fall. Because of this physical relationship between rising temperatures and falling relative humidity, as the greenhouse air is exhausted and replaced by cold outside air that is heated as it enters the greenhouse, the relative humidity is reduced with the incoming air.

During summer, with hot, dry weather, the greenhouse air may become very low in relative humidity. In this case, you can install some misters above the crop rows. They would be at about 3 ft centers, depending upon the specifications of the mist nozzles, along a ¾″ diameter PVC pipe. They are attached to the pipe by special "saddles" glued to the pipe. The header pipes are connected to a pump capable of 40–60 psi pressure to attain a fine mist. The system is operated by a time-clock or other controller. Misting cycles and periods depend upon the level of relative humidity. The lower or drier the conditions, the more often the mist is activated. Normally, this would be about every 15–20 min for a period of 10–15 sec. If the relative humidity is very low, plants may lose excess water causing the stomates to close, restricting the entrance of CO_2 and therefore slowing photosynthesis and plant growth. Plants under such conditions can wilt and leaf margins may burn.

IRRIGATION

Drip irrigation is with a pump in the nutrient tank that is activated with a time-clock or controller. The cycles (time between irrigations and the length of time during an irrigation cycle) depend upon the weather conditions (temperature, sunlight, relative humidity), season (day length), crop stage of growth, and the nature of the crop. Low-profile plants are normally grown in a nutrient film technique (NFT) or raft culture system so irrigation is constant. Vine crops growing in a substrate with drip irrigation require closer monitoring of irrigation cycles and adjustments according to the earlier-mentioned factors. Large-leaf plants such as European cucumbers and eggplants due to the expansive leaf area surface require more irrigation than do tomatoes or peppers having smaller total leaf area. All of these parameters of caring for your plants will be a learning experience, especially for the first crops undertaken.

However, that is the fascinating challenge of growing that will increase yields with your experience of tending to them.

Time-clocks and controllers suited for drip irrigation are discussed in Chapter 21. Whenever an irrigation cycle occurs for hydroponic systems, irrigation is always with a nutrient solution, not raw water. If plants wilt during mid-day, high-light conditions, the probable cause is lack of water. Immediately increase the irrigation cycle frequency. The duration of an irrigation cycle is also important as mentioned earlier in Chapter 6 in achieving sufficient leachate to prevent any salt build-up in the substrate.

18 Benefits of a Greenhouse to the Homeowner

I personally became involved in backyard greenhouses in the mid-1970s. I and an engineer friend started a company, Resh Greenhouses Ltd., in Vancouver, Canada. We had been working part-time on commercial hydroponic greenhouses near Vancouver and thought that building small hobby greenhouses equipped with full hydroponic systems may have a market for homeowners. At that time I was a full-time student doing research for my doctorate degree and my engineer friend had his civil engineering consulting business. We became very enthusiastic about introducing hydroponics into society at the level of backyard gardeners. The science was fairly new at that time in the commercial greenhouse industry growing vegetables. It was our opinion that most people would like to grow vegetables in a cleaner environment than soil and at the same time reduce the stooping labor of growing in their gardens. Added to that, growing in a greenhouse would extend the growing season to year-round.

Our company manufactured small hobby backyard greenhouses that were prefabricated from aluminum framework and fiberglass covering. The package came with all components of heating, cooling, and a hydroponic system. At that time gravel culture was the easiest method of hydroponics. Located in a temperate climate that had short, rainy, cold weather from late fall to early spring, backyard greenhouses would offer a new dimension to gardening during those seasons when no traditional outside gardening was possible. Most people really enjoyed the presence of houseplants in their homes year-round, but were not able to grow vegetables inside due to the messiness of soil growing. People working all day at their normal jobs would leave the house in the early morning when it was still dark and return in the evening under dark winter conditions. They missed the outside activity of gardening during the winter months. Our backyard greenhouses were equipped with artificial supplementary lights that extended the day length to 14 hours, so when clients returned from work in the evening they would go into the greenhouse and live summer conditions with all of their plants growing. Most of our customers integrated the rejuvenation of house plants into the greenhouse with the vegetable crops and soon wished that they had a larger greenhouse.

Hydroponic culture had a fascination in itself for the clients. Clients wished to learn more about the nutrients, different hydroponic growing systems, plant care, and pest management. The interest grew and soon I became involved in teaching extension classes on hydroponics during the evenings at the University of British Columbia. Many of the students were owners of our greenhouses. The students often asked me to write a book on hydroponics as there was no real compiled information from one source, but just bits and pieces from various papers and journals. That was the birth of my first book, *Hydroponic Food Production*, in 1978.

Growing hydroponically offers very clean conditions without any soil. Plants inside the backyard greenhouse are protected from many insects and diseases and keep the vegetables away from contact with soil. The vegetables are grown to full mature stage, so flavor and nutrition is beyond what could be experienced in store-bought products. This heightened flavor and nutrition of healthy products grown by the hobbyist is very self-satisfying. People with backyard greenhouses produce lettuce, herbs, tomatoes, peppers, and cucumbers out of season to backyard outside gardening. Lettuce and herbs can be grown constantly by sowing and transplanting new crops weekly, whereas the vine crops are seeded in October as the outside garden comes to an end. With artificial lights in the greenhouse (cool-white or T5, high-output, fluorescent) located above the beds (3) of plants, it is possible to get tomatoes in production by January and peppers by February. Production continues until mid-summer when outside gardening provides these same crops. The greenhouse crop is changed during August–September, the greenhouse cleaned, and a new crop started by October again.

If the hobby grower wishes to grow other vegetables such as radish, chard, arugula, green onions, bush beans, and others, he can easily do so in the greenhouse. The type of hydroponic system to use then depends upon the crop as we discussed in Chapter 15. Lettuce, arugula, basil, and some other herbs do best in nutrient film technique (NFT), while root crops such as radish would be in a peatlite mix. Having these salads available fresh during winter months is a unique experience for backyard growers. They may share them with family and friends imparting a feeling of pride and accomplishment that others cannot do without a backyard greenhouse (Figure 18.1).

FIGURE 18.1 Happy gardener harvesting vegetables from his hydroponic backyard greenhouse. (Drawing courtesy of George Barile, Accurate Art, Inc., Holbrook, New York.)

The transition from a wintery environment outside to a tropical paradise inside the greenhouse with light and pleasant temperatures offers an escape from the depressing ambient weather conditions. It lifts the hobbyists from their reality of work and darkness into an environment not experienced at that time of the year. This psychological effect on people with the surroundings of plants raises their spirits to be more positive and energetic with their normal daily routines. The greenhouse is a sanctuary, a special garden retreat from the everyday hustle and bustle. With your senses bathed in solitude with light and abounding aromas of live plants, you relax as you tend the plants or simply sit and savor the sweet smells of the surrounding nature. It is a place to unwind, read a book, or enjoy a cup of tea conversing with a friend or your soul mate. The greenhouse environment takes you on a mini-vacation to a tropical paradise.

Hobby hydroponic greenhouse growing is very educational for children, introducing them to the miracles of nature in the growing of food. They learn that their food does not grow on supermarket shelves. They will be thrilled by the development of plants from seed to producing vegetables in the environment of the greenhouse. Students can carry out science projects on plant nutrition and nutrient solutions applying their school chemistry to something that actually materializes in food production. Overall, it will give them an appreciation for the amount of work involved in producing crops and teach them some self-reliance of growing their own vegetables in the greenhouse, and later during spring and summer they can extend their interest to having their own vegetable garden outside. They can start their plants in the greenhouse as bedding plants and later transplant them to their outdoor vegetable garden. Of course, this also applies to the hobby greenhouse grower who can start all of his or her flowers and vegetables from seeds in trays in the greenhouse and plant them outside when temperatures are favorable. Sow tomatoes, peppers, eggplants, herbs, and flowers of your varietal choice in the greenhouse during March to April to begin your outdoor gardening in May.

Owning a backyard greenhouse is an investment in your enjoyment of nature, your peace of mind, and your family's health!

19 Design, Layout, and Construction of Backyard Greenhouses

When selecting a backyard greenhouse consider first the size. The size of greenhouse best suited for your needs depends upon what you wish to grow and your weekly consumption. From past experience with manufacturing greenhouses, I found that a 10½ ft by 12 ft greenhouse could easily supply a family of four to six persons. Most clients soon started using their greenhouse for rejuvenation of their indoor house plants so took some of the greenhouse space for them. Our 8 ft by 12 ft greenhouse had about one-third less growing space since only two beds would fit instead of three with the 10½ ft wide model. In terms of cost and growing space, we found that the 10½ ft by 12 ft model was the best value for the hobbyist.

GREENHOUSE LOCATION, TYPE, AND SHAPE

Hobby greenhouses may be free-standing or lean-to structures (Figure 19.1). The choice here depends upon the location and space available in your backyard. A lean-to structure can be attached to a building wall such as your garage or onto a tall wooden fence. Attaching it to a building has the advantage of getting some insulation from the building. Keep in mind when locating such a lean-to structure that it must receive adequate natural light so the location must not be in a shaded area or on the north side of a building that would prevent natural sunlight from entering. On a fence do not locate it on a south-side fence where the fence would restrict direct light to the greenhouse.

The best location in your backyard is where the greenhouse can receive sunlight most of the day (Figure 19.2). To achieve this locate it in the middle or at one side where no shade is cast by fences, buildings, or trees. If your backyard is fully treed or large trees in neighboring yards shade the light entering your yard, the trees will have to be thinned out by removing lower branches or take out the trees. If the shade is cast by neighboring trees you will need cooperation from the adjacent property owners to prune their trees or perhaps remove some of them. You may be able to convince them to do so if you are willing to share some of your vegetables with them.

A free-standing type of greenhouse is most efficient in receiving sunlight from the east, south, and west cardinal directions. It also gives you the greatest growing area for its size. If possible, orient the greenhouse north-south. That is, the ridge of the structure is oriented north-south. This will give the best light for vine crops as light will enter the rows of plants also oriented north-south. If oriented east-west, there will be mutual shading of plant rows with the south facing row receiving most light as it will cast

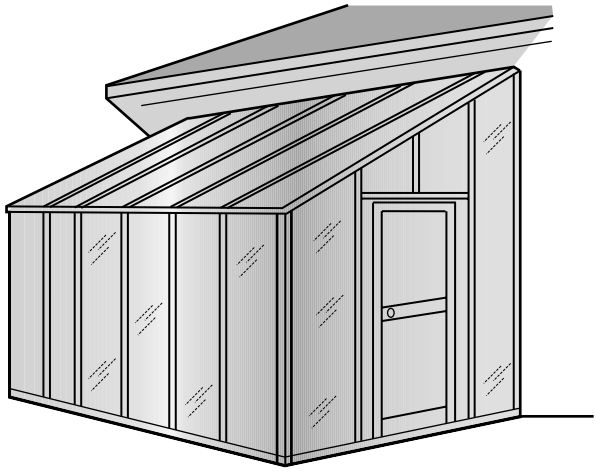

FIGURE 19.1 Lean-to greenhouse attached to a building. (Drawing courtesy of George Barile, Accurate Art, Inc., Holbrook, New York.)

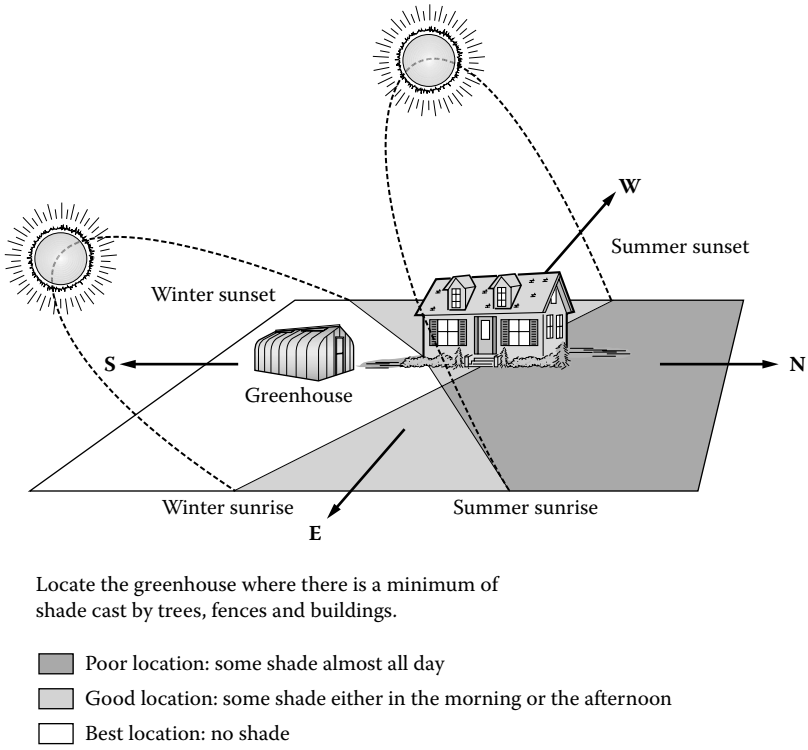

FIGURE 19.2 Location of backyard greenhouse according to sun's movement. (Drawing courtesy of George Barile, Accurate Art, Inc., Holbrook, New York.)

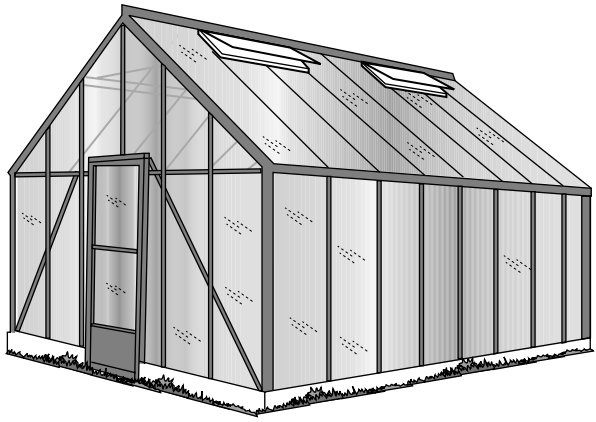

FIGURE 19.3 Traditional gable, free-standing greenhouse. (Drawing courtesy of George Barile, Accurate Art, Inc., Holbrook, New York.)

shadows on the other rows, especially during the fall, winter, and early spring months when the sun's angle of incidence is much lower than during the summer months. Pick the spot in your backyard that has best sunlight exposure to maximize crop production.

Whether the greenhouse is a lean-to or a free-standing structure, there are two basic shapes. The traditional gable with straight eaves where the sides meet the roof and the gothic shape with curved eaves where the sides bend to form the roof (Figures 19.3 and 19.4). While you may construct a backyard greenhouse with a polyethylene covering, it lacks the beautifying appearance for your backyard compared to the clarity of glass or polycarbonate. Greenhouses with curved eaves use polycarbonate to enable forming the bend at the eave location. Glass is perfect for the traditional gable-shaped greenhouses, but polycarbonate is also suitable. Polycarbonate has the advantage of higher insulation. If you wish to grow year-round in your greenhouse it must withstand wind, snow loads, and resist ultraviolet (UV) breakdown of the covering. Polyethylene has a limited life expectancy due to UV light turning it brittle as the polymers are damaged. The last thing you want in your backyard is an eye-sore structure that turns milky to a yellowish color with age of the covering. Also, if the covering has to be replaced in the cold winter months you risk losing all of your plants. For these reasons, invest a little more in a permanent structure that has a nice appearance and will withstand the weather all year.

NATURE OF GREENHOUSE STRUCTURE

Some do-it-yourself (DIY) papers suggest that you construct a greenhouse using plastic polyvinyl chloride (PVC) pipe. It combined with wooden end-framing allows you to construct a Quonset style house, but this type of structure will not withstand snow loads or strong winds. These types of houses are okay as cold frames using polyethylene covering. They are really only cold frames suited to starting your bedding plants early in the spring. They are not greenhouses with heating and cooling systems that permit you to grow year-round.

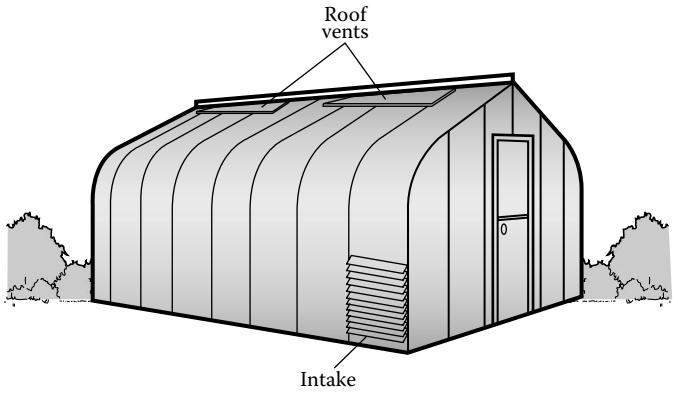

FIGURE 19.4 Free-standing gothic greenhouse. (Drawing courtesy of George Barile, Accurate Art, Inc., Holbrook, New York.)

You may construct the greenhouse of treated wood framing, but that is not as permanent as aluminum framework. With wood framing you could cover it with polycarbonate, but not easily with glass as that would require a lot of framing for the glass panels. In the end, you may not save much money building it yourself. I recommend that you purchase a hobby greenhouse in the market as there are many sizes and shapes available to fit your budget and also most are constructed of aluminum framework so are permanent for many years. In addition, the aluminum frame comes in white, green, or brown so you can pick a color that adds to the overall appearance of your home and backyard. Galvanized steel structures are fine, but may develop rust spots over time. I do not think that they are much cheaper than aluminum structures. The aluminum will retain its beauty over time so will always be an asset to the surroundings of your home.

The frame of the greenhouse must be strong enough to support your plants whether they are hanging baskets or vine crops supported by string to an overhead cable attached to the greenhouse superstructure. It must also support the covering and equipment such as heaters and fans. If it is wood, the structural members or rafters, as in your house, must be sufficiently close together to prevent any sagging of the covering material, especially in the winter under snow loads. You may need to attach cross members to the rafters in several locations to strengthen the support of the covering material, such as glass or polycarbonate. Additionally, wooden structures intercept light causing a lot of shading, especially in the winter when you need all the sunlight available. If you use wood, be sure to paint it with white paint, preferably an oil-based paint to resist the constant moisture present in the greenhouse. Aluminum framing naturally reflects light and at the same time the dimensions of the ribs and purlins (cross members) are much smaller so do not cast as much shadow as wood framing.

SIZES AND PRICES

There are many sizes of both lean-to and free-standing greenhouses. The most common dimensions for lean-to greenhouses are in widths of 6 ft, 8 ft, and 10 ft with

lengths of 6 ft, 8 ft, 10 ft, and 12 ft, with increments of 2 ft to 20 ft or longer. For the best utilization of the growing space choose a 10 ft width with 12 ft in length or more. Prices for these houses range from $3000 to $6000. Prices also depend upon the covering material. For example, double tempered glass is the most expensive, elevating prices to $15,000 for the larger structures. Most come with two roof vents operated by solar vent openers that do not require electricity. These vents open as sunlight builds up heat around a cylinder mechanism that pushes open the vent.

Free-standing greenhouses come in widths of 8 ft, 10 ft, and 12 ft and in 2-ft increments to 20 ft. Similarly, lengths are available in 2-ft increments starting at 10 ft up to 20 ft and longer. I feel the most common size for a family of four to six members is 10 ft by 12 ft or 10 ft by 16 ft. That will produce sufficient vegetables to please the entire family. Prices for these greenhouses range from $4000 for an 8 ft by 12 ft to $6000 for a 10 ft by 12 ft and higher. The covering material also influences prices as mentioned earlier.

COVERING (CLADDING)

The more light let through (transmissibility) the covering, the better for plant growth. Coverings include glass (single or double tempered); rigid plastic (polycarbonate)-single, double wall, triple wall, five wall; and polyethylene-single or double layer with dead air space between the layers. The covering type influences not only the price, but most importantly the insulation capability.

Glass is the favorite covering for gable style greenhouses. It is very attractive, showing plants growing visible from the outside and offers lots of light, especially during the winter. Single and double tempered, unbreakable glass is available. The double glass retains heat better than the single layer. If you purchase a single layer glass greenhouse you can insulate it with a layer of polyethylene on the inside during the winter to retain heat. This, of course, will reduce some of the incoming light and make the greenhouse less transparent so it may lack the visual appeal of the glass alone. I do not like this method to retain heat as the inside poly layer will also cause more condensation that can drip on your plants and promote potential diseases. It is far superior to purchase the tempered double glass covering. One thing that can be done to reduce some heat loss is to install 2″ thick Styrofoam on the greenhouse sides below the bench level. In most cases the hydroponic systems for lettuce nutrient film technique (NFT) and vine crops use raised trays so that they are at least 2 ft above the floor. Thus, the Styrofoam will not significantly reduce light at the crop level if it is fitted to 2 ft high around the inside of the greenhouse walls. Regardless of the covering, the use of the Styrofoam along the base walls will save additional energy loss.

Polycarbonate is my choice of covering as it is available in different wall thickness to reduce heat loss. Polycarbonate is available in 4 mm, 6 mm, and 10 mm twin wall and 8 mm and 16 mm triple wall thicknesses (Figure 19.5). A 16 mm 5-wall polycarbonate gives the best insulation, but its light transmission is reduced to 62%. This would not be good for regions having very dark winters with little natural sunlight. For example, in the rainy areas of the West Coast where minimum winter temperatures are not that low, use the twin-wall polycarbonate. In Central regions and the East Coast where extremely cold periods occur during the winter, but in most cases under sunny conditions, the thicker polycarbonates of triple wall and five walls would be okay.

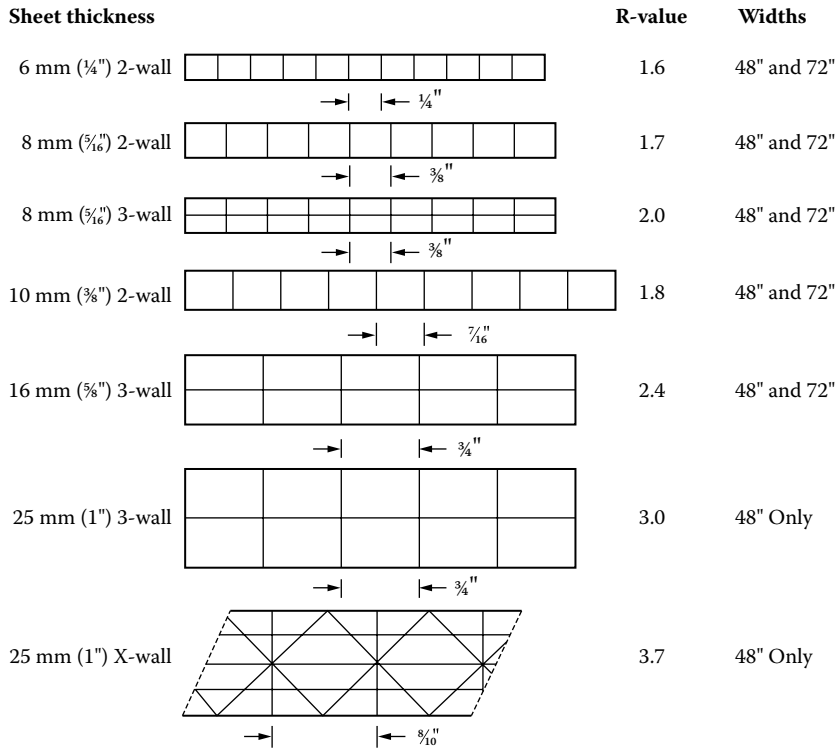

FIGURE 19.5 Comparison of multi-walled polycarbonates. (Drawing courtesy of George Barile, Accurate Art, Inc., Holbrook, New York.)

Light transmission of polycarbonate is diffused and twin-wall polycarbonate light transmission is 10% less than that of glass. The effectiveness of thermal insulation of a covering is measured as an R-value the same as insulation in your home. The higher the R value the greater the heating and cooling efficiency. Here are a few R-values for different greenhouse coverings:

Product	R-values
Single 6-mil polyethylene	0.87
Double 6-mil polyethylene	1.70
3 mm single tempered glass	0.95
Double tempered glass	2.00
4 mm twin-wall polycarbonate	1.43
6 mm twin-wall polycarbonate	1.54
8 mm twin-wall polycarbonate	1.72
10 mm twin-wall polycarbonate	1.89
16 mm triple-wall polycarbonate	2.50
16 mm 5-wall polycarbonate	3.03

Another aesthetic plus for polycarbonate is its ability to be bent to form the curved eaves making the gothic shape of a greenhouse. This has a very attractive modern look.

The greenhouse door should be of aluminum and tempered glass window with a screened opening that allows ventilation during the hot weather. The sidewall height should be at least 6 ft to allow the training of vine crops up to the roof height. Additional height is another advantage of the curved eaves of the gothic shape. The ridge height should be about 8–9 ft. To raise the greenhouse height you may place it on top of a brick or masonry concrete block foundation. This can raise the greenhouse up from 16″ to 24″. Just realize that the door must then be positioned this same height lower than the greenhouse base so that there is not a step into the greenhouse.

SITE PREPARATION

The greenhouse should be easily accessible and be located within reasonable distance from a source of water and electricity. A PVC water line will have to be buried below the expected frost depth of winter months, usually at least 3 ft. A 1″ diameter main will be adequate. When digging the trench add an underground buried cable that will carry a 220 volt, 80–100-amp service from your house to the greenhouse. These will be stubbed at a location on the back wall of the greenhouse, so a good plan should be made to get the exact location of the greenhouse. Once the utilities are in place, lay a landscape weed mat over the entire area that the greenhouse will occupy and extend it several feet beyond the perimeter of the greenhouse. This is to prevent weed growth within and immediately adjacent to the greenhouse.

In the center of the weed mat construct a treated 2″ × 4″ wooden frame having the edges of the wood laying on top of the weed mat (Figure 19.6). For example, for a 10 ft × 12 ft greenhouse make a wooden frame 12 ft × 14 ft. Attach the corners of the frame with metal brackets screwing them into the wood with stainless steel screws. Level and secure the frame in place with 1″ × 2″ × 18″ treated wood stakes or rebar at the corners and along the sides. Be sure that the frame is square by measuring the diagonals to make them equal length. Place 1″ thick Styrofoam on the bottom for insulation. Then fill the entire framed area with pea gravel to give the greenhouse a good base with free drainage. The greenhouse will then be set on top of the pea gravel. If you wish to get a very nice clean look, install stepping stones in the greenhouse and as a path to the greenhouse from your home.

Some references recommend that the top ridge of the greenhouse be oriented east to west. This will provide maximum sunlight exposure during the winter when the angle of incidence of the sun is very low; however, this applies only to low-profile crops and potted ornamental house plants. For vine-crops, orient the greenhouse ridge north-south so that the sun will shine down the rows of plants and not just maximize light on the south row as it will shade the others.

When erecting the greenhouse, fasten its base to 6″ × 6″ treated wooden timbers or make a foundation with several layers of 8″ × 8″ × 16″ concrete blocks. The blocks must sit directly on the weed mat, not on top of the pea gravel fill. The use of blocks will raise the height of the greenhouse. If you use treated wooden timbers for the base install a 10 mil polyethylene barrier between the base and the aluminum greenhouse sill to prevent corrosion of the aluminum.

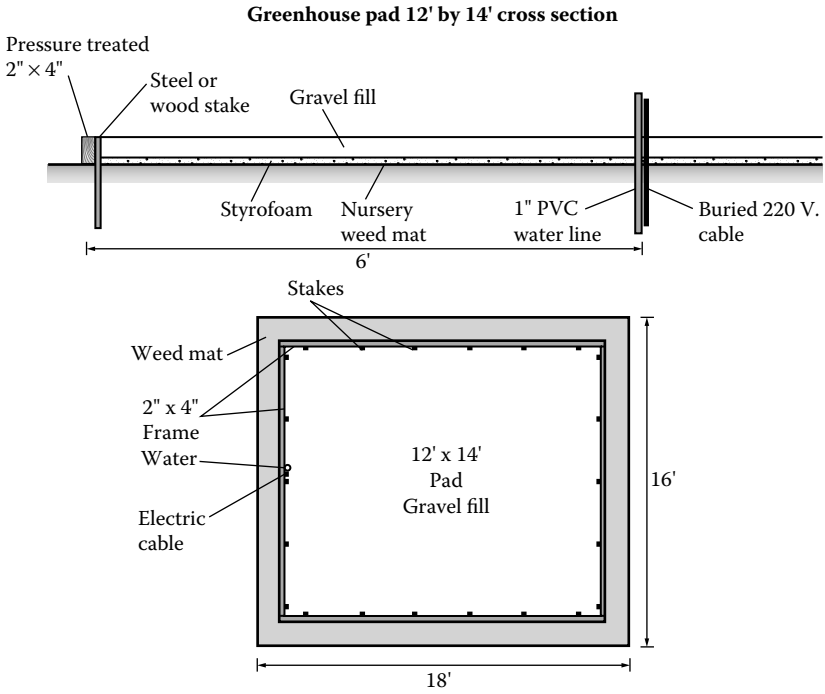

FIGURE 19.6 Site preparation for a backyard greenhouse. (Drawing courtesy of George Barile, Accurate Art, Inc., Holbrook, New York.)

Do not use old railway ties for the base as they are treated with creosote that gives off fumes, especially under warm temperatures, that are toxic to plants. Pentachlorophenol was an early wood preservative, but is now restricted in its use and is not approved for residential application. It gives off damaging fumes so do not use it for greenhouse wood preservation as it acts as an herbicide. Cuprinol, copper naphthenate, is probably the most commonly used wood preservatives used by gardeners. It is recommended for use on sheds, fences, garden buildings, decking, and garden furniture as a wood preservative. It is approved and safe to use on these structures as well as for greenhouses. I would, however, recommend painting the treated wood to seal it and get good light reflection.

CONSTRUCTION OF A GREENHOUSE

The greenhouse frame consists of ribs set onto a sill and purlins and girts (horizontal bars) that bolt to the ribs (Figure 19.7). If this is a prefabricated kit, the sills will screw or bolt into the base you prepared of timber or concrete blocks. Start with the end sides (traditional) or ribs (gothic) and bolt them with the purlins at the eave height (traditional) or ridge in the case of the gothic style. Then attach the rest of the cross members (purlins) to the gable ends. Square the structure and tighten the bolts of this outside frame before filling in the rest of the studs (traditional) or ribs (gothic).

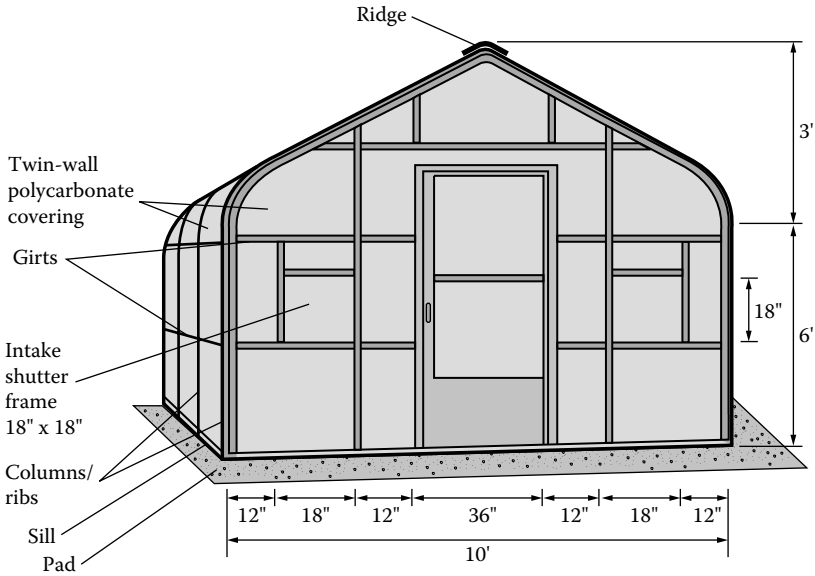

FIGURE 19.7 Greenhouse frame c/w ribs, purlins, gables, vent, and fan openings. (Drawing courtesy of George Barile, Accurate Art, Inc., Holbrook, New York.)

Most structures will have knee braces that keep the house from folding in accordion motion when strong winds push on the gable ends. They attach to the gable end ribs and go on an angle to the sill. They will also keep the house square while attaching the remaining ribs and purlins. With the traditional form, the rafters are attached to the studs at the eave height and are secured at the top with the ridge purlin. With the gothic style, the ribs are both the studs and rafters in one piece and so are attached with the ridge purlin and others (usually two to three) in the roof area. Once you complete the basic frame with the entire purlins, frame the gable ends with the studs. If you plan on using an exhaust fan ventilation system, frame the area where the fan is to be installed on the gable opposite the door, and on the other gable, where the door is located, frame two openings for the automatic shutters. The exhaust-fan frame should be about 5–6 ft above the floor (at the eave level) and the automatic shutters at about 4 ft high. Some backyard greenhouse builders may pre-assemble the gable ends. That will save lots of time in the erection of the house. If the greenhouse has roof vents assemble the framework for them.

The next step is to install the polycarbonate or glass covering. The following description is for the installation of polycarbonate as glass is more specialized and requires that you follow the installation instructions exactly as provided by the greenhouse manufacturer. In any case, if you purchase a pre-fabricated greenhouse, it will come with full step-by-step instructions for its assembly. Complete all the supporting structure (superstructure) and painting before installing the covering. Orient the sheets with the ribs (cells) parallel to the rain flow (slope) and the outside face is the side of the panels marked "UV side out" (Figure 19.8). This orientation applies to multi-walled and corrugated polycarbonate. Polycarbonate can be cut with a jigsaw

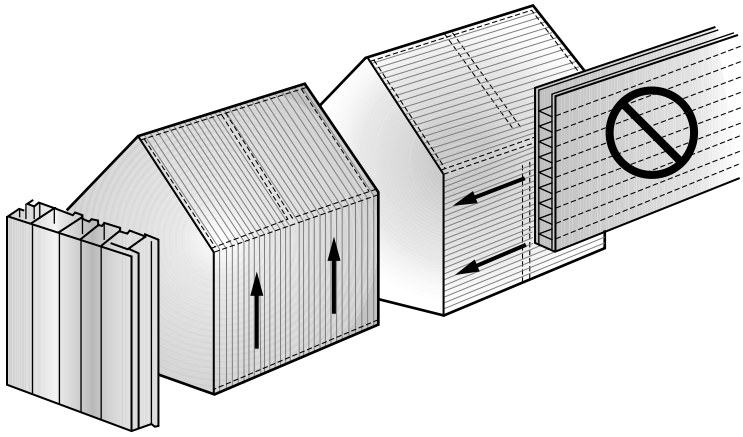

FIGURE 19.8 Installation of polycarbonate sheets. (Drawing courtesy of George Barile, Accurate Art, Inc., Holbrook, New York.)

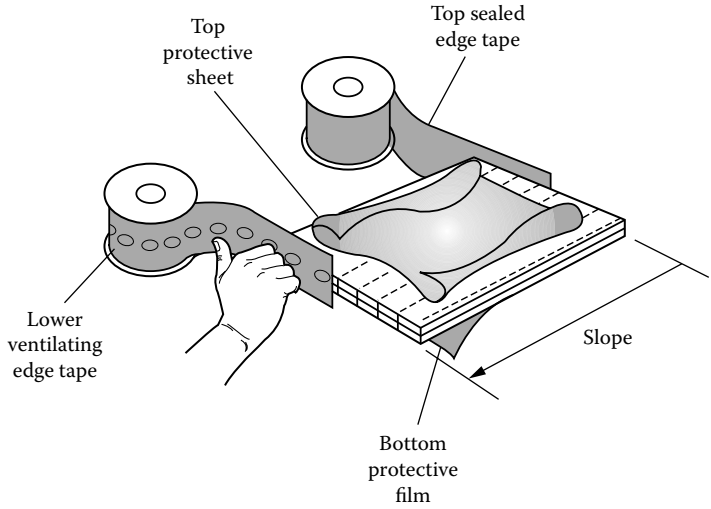

FIGURE 19.9 Tape ends of polycarbonate sheets. (Drawing courtesy of George Barile, Accurate Art, Inc., Holbrook, New York.)

with a fine-toothed blade. Remove any dust in the flutes (channels) with an air compressor or vacuum cleaner. Remove the protective film a few inches back from the edges where you are working with its installation. After installation is complete remove all the protective film. Seal the upper edge of the sheets with a special aluminum tape and the bottom edge with a polycarbonate vent tape that allows moisture to exit but prevents debris from entering into the flutes (Figure 19.9).

Polycarbonate expands and contracts with temperature, so when fastening it to the framework use slightly larger holes than the diameter of the fastener to allow

some movement. Set the first sheet on square and screw every fourth corrugation to each purlin of the greenhouse structure. Before attaching the next sheet run a bead of caulking compound, such as silicone, along the last corrugation where one corrugation of lap takes place with the next sheet to seal the laps. At the sill insert a closure strip (foam having configuration of the corrugation) as you screw through the corrugated sheet into the sill. Likewise, at the roof peak insert a closure strip as the sheets are held in place with the ridge bar (Figure 19.10). If the greenhouse is of a traditional shape, closure strips will need to be placed at each end of the panels. At the sill, purlin where the sidewall meets the roof (eave), the lower end of the panel of the roof where it overlaps the sidewall and at the peak use closure strips to seal the panel ends. Allow at least 2″ of overlap of the roof panels beyond the sidewall panels at the eave to make water flow past the sides of the greenhouse. All fasteners should be stainless steel screws or teck (self-drilling) screws (Figure 19.11) that have neoprene washers under the heads to seal the screw holes as they are tightened to the polycarbonate. Be careful not to tighten the screws excessively causing the polycarbonate to become indented underneath.

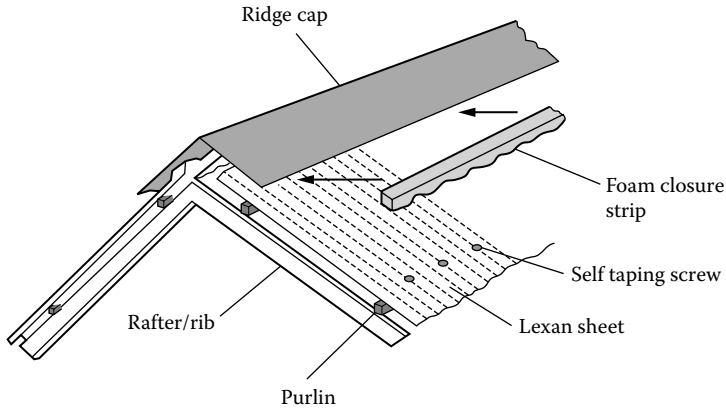

FIGURE 19.10 Installation of closure strips at roof peak of greenhouse. (Drawing courtesy of George Barile, Accurate Art, Inc., Holbrook, New York.)

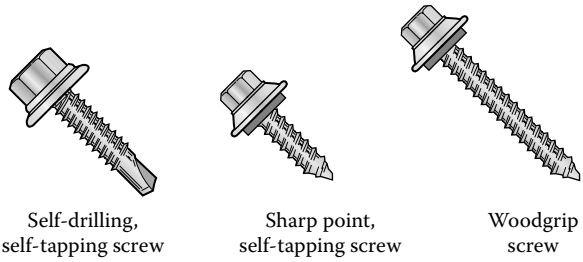

FIGURE 19.11 Use of self-drilling teck screw and wood screw fasteners. (Drawing courtesy of George Barile, Accurate Art, Inc., Holbrook, New York.)

If the greenhouse is a beamed structure having 2″ × 4″ rafters without purlins, such as in the case of a wooden structure, spacer blockings will have to be fastened between the rafters (Figure 19.12). The spacing of the rafters and spacer blocks vary with the polycarbonate sheet thickness and the snow load, for example, using 8 mm thick polycarbonate panels, space rafters every 2 ft with blocking spacers at every 6 ft going across the rafters for a roof load of 60 lb per sq ft. With 16 mm thick polycarbonate sheets, rafters may be spaced at 4 ft with blocking every 2.5 ft for a 60 lb load. If the rafters are at 2-ft centers with 16 mm thick panels no blocking is needed. The panel width is 4 ft. Keep the spacer blocks 3/8″ below the rafter face to permit condensate movement past the blocks.

If the greenhouse superstructure is made without purlins, use specific fastener bars to join the polycarbonate sheets (Figure 19.13). These aluminum base fastener bars are attached with self-drilling screws (teck screws) about every foot to the center of the rafters. Work one sheet at a time going across the structure. Slide the sheet under the first fastener bar and then go to the next rafter and slide the fastener base under the sheet and attach it to the rafter. Repeat this with all sheets until complete; then attach the caps to the base fastener bars using a rubber mallet. The caps lock the panels into the fastener bars. Alternatively, you may use just a cap and screw it directly into the rafters without a base bar. Attach the panels to the spacer blocks between the rafters with a screw, washer, and ⅜″ thick by 1″ diameter neoprene spacer. This permits the condensate moisture to flow on the inside of the polycarbonate sheet without it touching the cross blocking so drip will not occur within the greenhouse. To seal the ridge use a ridge cap formed from aluminum. Seal the panels

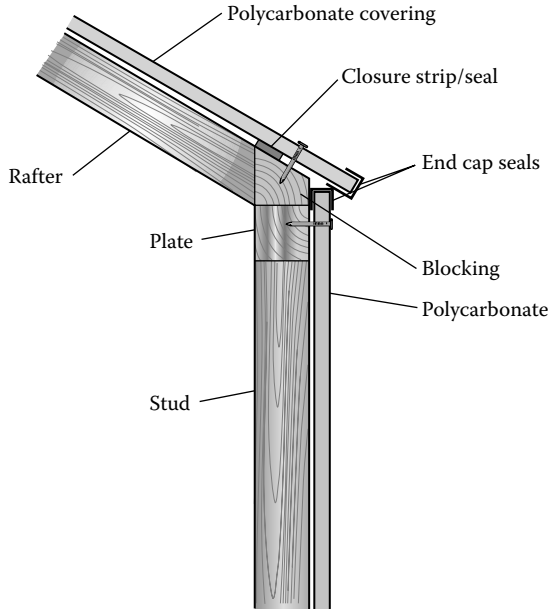

FIGURE 19.12 Spacer blocks with rafters of a wooden greenhouse. (Drawing courtesy of George Barile, Accurate Art, Inc., Holbrook, New York.)

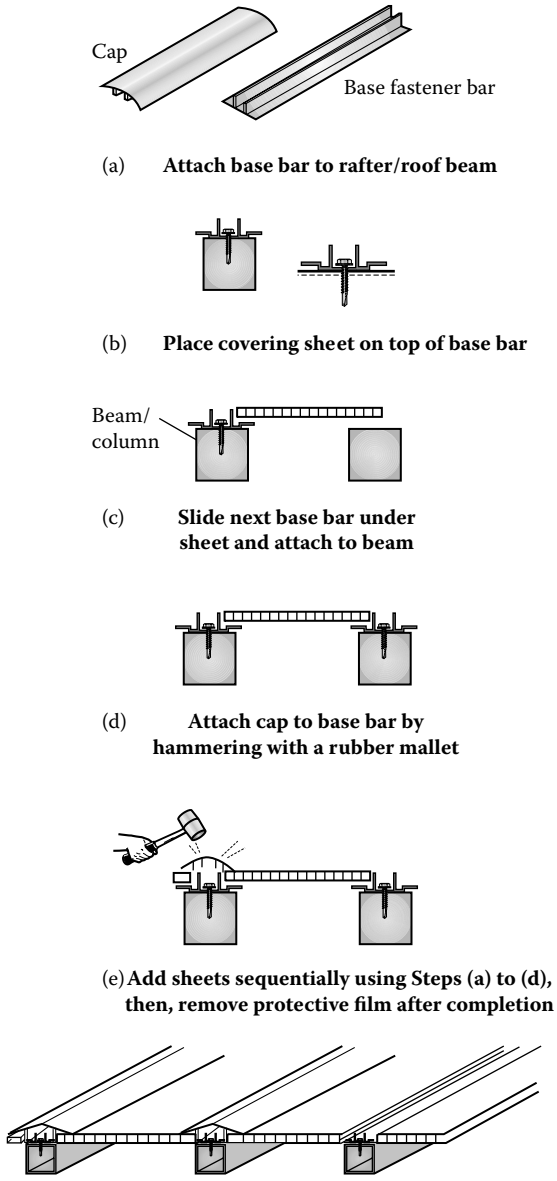

FIGURE 19.13 Installation of polycarbonate to structures without purlins. (Drawing courtesy of George Barile, Accurate Art, Inc., Holbrook, New York.)

into the ridge cap using a foam gasket similar to the closure strips for the corrugated material, but this weather seal is square without corrugations.

If the greenhouse is of aluminum or other metal framework, purlins will be bolted across the ribs. The polycarbonate sheets are attached to the purlins using base and cap bars (Figure 19.14). With self-drilling stainless steel screws fasten the

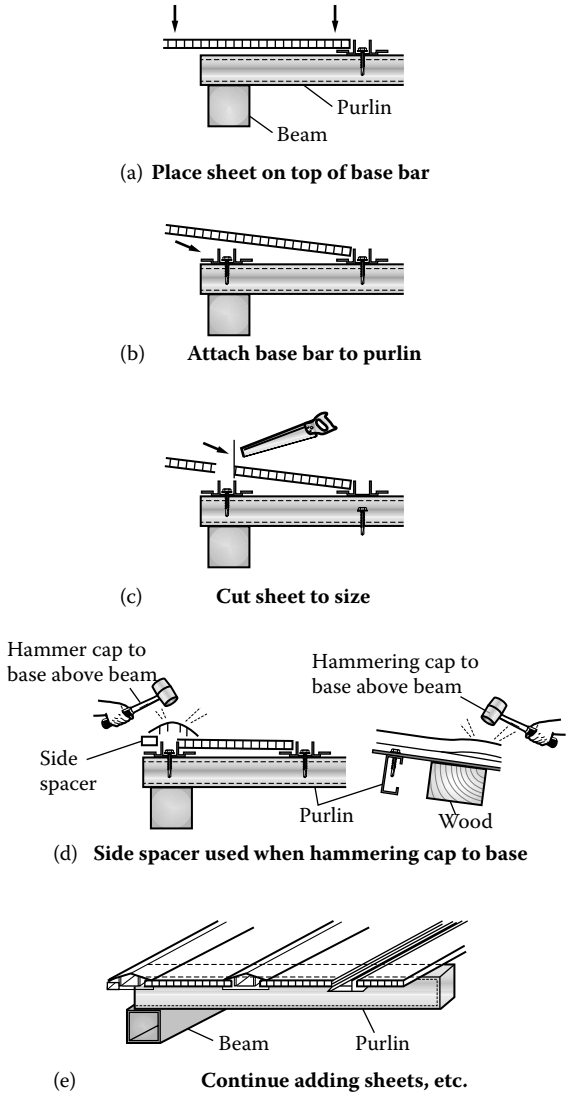

FIGURE 19.14 Installation of polycarbonate to structures with purlins. (Drawing courtesy of George Barile, Accurate Art, Inc., Holbrook, New York.)

base connecting bar to the purlins underneath the sheet edge. Place these bars at spacing equal to the width of the polycarbonate sheets. Attach the base connecting bars working across the greenhouse as the polycarbonate panels are added to get the correct spacing of the bars. Continue adding all of the sheets and the caps for the connecting bars as you proceed. Underneath the base bar use a shock-absorbing support such as a wooden block as the cap is connected to the base using a rubber mallet when the panel is in position. Remove the protective film from the polycarbonate

TABLE 19.1
Bending Radii of Polycarbonate Sheets

Sheet thickness (mm) (in.)	6 (1/4″)	8 (5/16″)	10 (3/8″)	16 (5/8″)
Smallest bending radius (m)	1.05	1.40	1.75	2.80
Smallest bending radius (ft)	3.44	4.6	5.73	9.2
	3 ft 5 in	4 ft 7 in	5 ft 9 in	9 ft 2 in

and drill screws with metal and neoprene washers to further fasten the panels to the eave purlin at the bottom edge of the panels if it is a gable shape greenhouse. Use a no-drip spacer neoprene washer between the sheet and purlin to allow condensate drainage. The connecting base bars have slightly raised edges to keep the panels from touching the purlins and thus permitting movement of condensation moisture. Once the gable ends, sides, and roof have been constructed caulk the edges of the gable ends where they meet the sidewall sheets.

The various fastening bars, caps, and ridge cap will be supplied by the greenhouse manufacturer; otherwise, if doing it yourself these bars should be available where you purchase the polycarbonate panels. Similarly, foam closure strips, all hardware come with the greenhouse kit or purchase it with the polycarbonate sheets.

When constructing a gothic style house, where the polycarbonate is bent from the walls to the roof, keep in mind that the polycarbonate sheets have a minimum radius that they can be bent without buckling. Table 19.1 shows the smallest cold bending radius for various panel thicknesses.

EXAMPLE OF GREENHOUSE CONSTRUCTION

Here I am presenting an example of the construction of an 8 ft × 12 ft backyard greenhouse. These greenhouses were constructed of aluminum framing and corrugated fiberglass panels as at the time polycarbonate panels were not common and very expensive. That was in the mid-1980s. The procedures, nonetheless, are the same as when they were constructed of corrugated polycarbonate. For twin-wall or multi-wall polycarbonate, the general procedure is the same with some modifications as to the use of the aluminum base bars and caps that attach to the purlins, which was explained earlier. The use of these fastener bars makes the installation simpler than previously as we did in the past with Resh Greenhouses Ltd. using pop-rivets and tech screws onto the purlins directly.

We built our greenhouses with prefabricated finished gable ends to make the erection simpler. However, if the gable ends are not completely finished with cladding, a door, and so on, this can be done after the framework is assembled as was explained earlier. Today, use the twin- or multi-walled polycarbonate panels to cover the entire greenhouse—sides, walls, roof, and end-wall gables. With the base pad ready prepared (Figure 19.6) as discussed earlier, position the treated wooden sills, level and square them, then fasten them with aluminum brackets at the corners. Assemble the ribs, purlins, ridge cap, and gable-end framing, square the entire structure, and tighten all bolts (Figure 19.15). Next, place all of the polycarbonate

FIGURE 19.15 Assembly of gable ends, with door and exhaust shutter, to purlins. (Courtesy of Resh Greenhouses Ltd., Vancouver, British Columbia, Canada.)

FIGURE 19.16 Attaching covering to greenhouse structure. (Courtesy of Resh Greenhouses Ltd., Vancouver, British Columbia, Canada.)

FIGURE 19.17 Caulking of gable ends. (Courtesy of Resh Greenhouses Ltd., Vancouver, British Columbia, Canada.)

panels, starting by pushing them under the ridge cap and bending them down over the purlins and attaching them to the sills (Figure 19.16). Use closure strips at the ridge cap and inside on the sills. Secure the panels to the sill with stainless steel wood screws having washers with neoprene seals underneath them. Screw into the wooden sill through the closure strip on the inside at 6″ spacing across the panels. With completion of the gable end panels caulk the joints between the gable ends and sidewalls using silicone or other outside weather-resistant caulking (Figure 19.17). The next steps include installing the glass and aluminum door, fan(s), and inlet shutter(s) for ventilation if doing this yourself and not a purchased pre-assembled gable. The completed greenhouse with hydroponic beds, fan, and inlet shutter is shown in Figure 19.18.

GREENHOUSE COMPONENTS

The greenhouse environment must be kept optimum to maximize plant yields. The two most important factors to control are temperature and light. Temperature control includes heating, cooling, ventilation, and air circulation. The heating requirements depend upon the crop grown, location of the greenhouse, and its type of construction materials. The nature of the covering material and its R-value determines the amount of insulation capacity of the structure. R-values were discussed earlier. The following example demonstrates the calculation of heat loss in a typical greenhouse.

FIGURE 19.18 Completed 8 ft × 12 ft greenhouse. (Courtesy of Resh Greenhouses Ltd., Vancouver, British Columbia, Canada.)

HEATING

The following example is to calculate the heat loss of a backyard greenhouse 10 ft wide (W) by 12 ft long (L) by 9 ft to the roof peak (H) having 6 ft high sidewalls (S). It is constructed of aluminum framing with 16 mm thick triple-wall polycarbonate cladding situated in a climate where the minimum extreme winter temperature would be about 0°F (−18°C). If under the extreme minimum temperature we wish to maintain 50°F (10°C), the temperature differential is 50 F (28°C) degrees (T). So, the heating system must be capable of raising the temperature of all the air volume within the greenhouse 50°F (28°C). The next step is to calculate the total exposed surface area (A) of the greenhouse. Refer to the diagram (Figure 19.19) for the dimensions of the greenhouse. The following websites give a simplified explanation for calculating heat loss for various shapes of greenhouses and have calculators that will do all the mathematics for you:

www.gothicarchgreenhouse.com/heating.htm
www.gothicarchgreenhouse.com/Greenhouse-Heater-Calculator.htm
www.gothicarchgreenhouse.com/Greenhouse-Surface-Calculator.htm
www.littlegreenhouse.com/heat-calc.shtml
www.littlegreenhouse.com/area-calc.shtml
www.sherrysgreenhouse.com/oldsite/GHheating.html

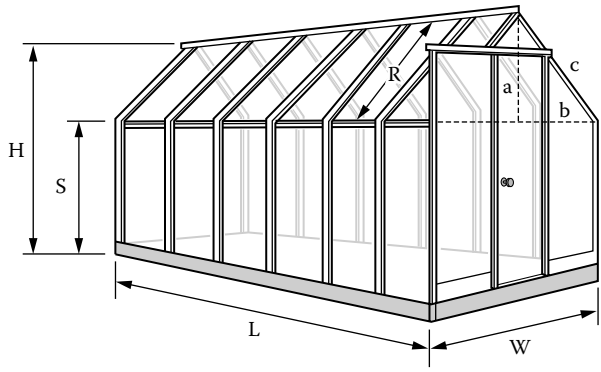

Length of hypotenuse (longest side) of triangle
pythagoras theorem: $a^2 + b^2 = c^2$

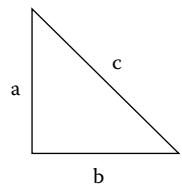

Roof width (R) = c

$R = c = \sqrt{a^2 + b^2}$

= Square root of the sum of the squares of sides "a" and "b"

FIGURE 19.19 Calculation of gable greenhouse surface area. (Drawing courtesy of George Barile, Accurate Art, Inc., Holbrook, New York.)

Use the following equation:

1. Exposed Surface Area (A) = Area of Gables + Area of Walls + Area of Roof

Area of Two Gables: This is a traditional gable-shaped greenhouse. To calculate the area of the gables, we must calculate the bottom rectangular surface plus the gable-shaped component. For that calculate the area by use of triangles. Each upper portion of the gable is made up of two triangles (Figure 19.19).

The area of a triangle is: A = ½ base × height = ½ × 5 ft (triangle base is ½ of the gable width) × 3 ft = 7.5 sq ft

For the two triangles: 2 × 7.5 = 15 sq ft

Add the bottom portion: 10 ft × 6 ft = 60 sq ft

For two gables: 2 × (15 + 60) = 150 sq ft

Area of Walls (2): 2 × (6 ft × 12 ft) = 144 sq ft

Area of Roofs (2): For this we use the triangle to find the length of the hypotenuse (longest side) using the Pythagoras theorem equation: $a^2 + b^2 = c^2$; where c = the length of the hypotenuse (see diagram in Figure 19.19).

$c^2 = a^2 + b^2 \Rightarrow c^2 = 3^2 + 5^2 = 9 + 25 = 34$: Therefore, c is the square root of 34: 5.8 ft. You may use a calculator to get the square root of a number. The longest side is 5.8 ft, which is the end width of the roof (R).

The total roof area is (two sides): 2 × L × R = 12 ft × 5.8 ft = 139 sq ft

Total Exposed Surface Area (A): 150 sq ft + 144 sq ft + 139 sq ft = 433 sq ft

2. Determine the greenhouse construction factor (C):

C = 1/R-value

The R-values were given in the table earlier for the various covering materials. For 16 mm triple polycarbonate R = 2.5.

Therefore, C = 1/2.50 = 0.40

3. Determine the wind correction factor (W): Refer to the following table.

Wind Velocity (mph)	"W" Factor
15 mph or less	1.00
20 mph	1.04
25 mph	1.08
30 mph	1.12
35 mph	1.16

For 30 mph use: W = 1.12

4. Determine heat loss in British Thermal Units (BTU):

$$BTU = T \times A \times C \times W = 50 \times 433 \times 0.40 \times 1.12 = 9700 \text{ BTU}$$

There are BTU calculators on the Internet websites listed earlier. You can simply plug in the dimensions of the greenhouse, the R-value for the covering, and the temperature differential and they will calculate the total BTU loss.

To determine the projected electrical cost for heating convert the BTU to Watts as follows:

Watts/h = BTU/3.413. Therefore: 9700 BTU/3.413 = 2842 watts or 2.84 KWH (kilowatts/hour)

Cost of operating under the most extreme cold conditions (assume cost of power is $0.10/KWH):

2.84 KWH × $0.10 = $0.28

However, note that this would be under the most extreme minimum temperature. Normally, this period would be only a few hours during the coldest day of the year. To project an annual cost of heating the greenhouse over a year, you will need to visit the website of the National Weather Service and look up the weather data for your specific location. The website is www.ncdc.noaa.gov (National Climatic Data Center). Click on "Most Popular Data" and go to "4. 1971-2000 US Climatic

Normals Products;" then go to "1971–2000 Normals Products Page" and finally to "Monthly Station Climate Summaries (CLIM20)." Then type in your state and city for your area records.

While you must design your heating requirements on the minimum extreme temperatures, when calculating the monthly predicted costs adjust the calculations according to the climate data of your area. The following example is for Seattle-Tacoma (airport), Washington (Climatic Div. WA 3) from the weather data charts (Table 19.2). The minimum extreme (using records from 1971 to 2000) for January was 0°F (–18°C), the minimum monthly mean extreme temperature was 34.8°F (1.6°C), and the daily minimum for January was 35.9°F (2.2°C) over the period.

To calculate the projected heating cost, use the daily mean for each month and add all of the months or use the annual mean and the temperature differential needed to heat the greenhouse to 70°F (21°C) (65°F or 18°C night, 75°F or 24°C day). For example, for January using the daily mean of 41°F (5°C) the temperature difference is 70°F–41°F = 29 F° (16 C°).

Then, multiply the previously calculated BTU by the fraction of monthly temperature difference divided by the extreme temperature difference.

For example, for January: 9700 BTUH × 29/50 = 5626 BTUH
The cost of electricity for the month of January: 5626/3.413 = 1648 Watts/h or 1.65 KWH
For 24 h: 24 × 1.65 = 39.6 KWH or about 40 KWH
Cost per day at $0.10/KWH: 40 × $0.10 = $4.00
Total cost for the month of January: 31 × $4.00 = $124.00

Do this for the rest of the months of the year or use the annual daily mean (52.3°F) as follows:

TABLE 19.2
Recorded Temperatures over the Period 1971–2000 for Seattle, Washington

Month	Min. Extreme (°F)	Min. Mean Extreme (°F)	Daily Min. (°F)	Daily Mean (°F)	Extreme Max. (°F)	Daily Max. (°F)
Jan.	0	34.8	35.9	40.9	64	45.8
Feb.	1	35.9	37.2	43.3	70	49.5
March	11	41.3	39.1	46.2	75	53.2
April	29	45.8	42.1	50.2	85	58.2
May	28	51.8	47.2	55.8	93	64.4
June	38	56.4	51.7	60.7	96	69.6
July	43	61.2	55.3	65.3	100	75.3
Aug.	44	61.9	55.7	65.6	99	75.6
Sept.	35	55.9	51.9	61.1	98	70.2
Oct.	28	49.7	45.7	52.7	89	59.7
Nov.	6	35.8	39.9	45.2	74	50.5
Dec.	6	35.3	35.9	40.7	64	45.5
Annual	0	34.8	44.8	52.3	100	59.8

Factor to multiply the extreme temperature BTUH by is:

Temperature difference of 70°F–52.3°F = 17.7 F degrees.
9700 BTUH × 17.7/50 = 3434 BTUH
WH is 3434/3.413 = 1006 watts/h or 1 KWH
KWH per day: 24 × 1 = 24 KWH
Cost per day: 24 KWH × $0.10 = $2.40
Annual Projected Heating Cost: 365 × $2.40 = $876.00

VENTILATION

Solar radiation is the force causing transpiration in plants. As the sunlight shines on the leaves of the plants, their temperature rises causing the stomates to open and transpiration to occur. As the water evaporates from the leaves the leaves are cooled.

Only about 70% of the light passes through the greenhouse roof cover, the other 30% is reflected. Plants absorb about 70% of this available light and re-radiate the other 30%. Therefore, plants absorb about 50% (70% of 70%) of the incoming sunlight using this for transpiration as shown in Figure 19.20. With a mature large crop, only 20% (30% of 70%) of the solar energy is left to heat the air. When there is no crop in the greenhouse, about 70% of the available total solar radiation is available to heat the greenhouse air.

During high solar light from spring through early fall, temperatures will rise in the greenhouse due to the "greenhouse effect." This effect is from the wavelength of the light changing as it enters the greenhouse through the covering and the heat component cannot escape. As a result, the air temperature in the greenhouse rises.

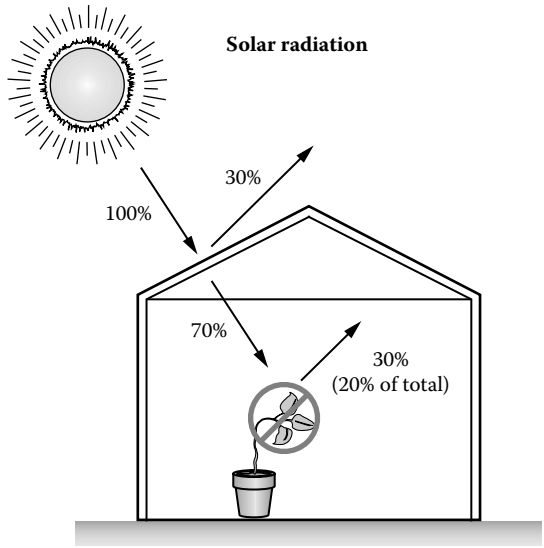

FIGURE 19.20 Solar radiation. (Drawing courtesy of George Barile, Accurate Art, Inc., Holbrook, New York.)

It soon exceeds the optimum maximum temperature range for the plants causing the stomates to close and restrict photosynthesis, which reduces growth and yields. To reduce excessive heat build-up, the air in the greenhouse must be forced out and be replaced by cooler outside air. Natural ventilation with roof vents will assist in the air exchange. This is the least expensive method of cooling as the vents can be operated without electricity using solar vent openers. A black cylinder filled with paraffin wax expands with heat and pushes a piston that opens the vents automatically with metal arm linkage as the temperature changes (Figure 19.21). These vent openers can operate roof and side vents. There are a number of different sizes of vent openers (about $50) that are capable of opening vents 12–15″ with vents weighing from 15 to 25 lbs and more. Operating temperatures to start opening can be adjusted from 60°F to 78°F (15.5–25.5°C) and maximum opening at 86–90°F (30–32°C).

Side louvers to permit cool fresh air to enter near the base of the greenhouse can also be operated by the automatic solar vent openers. With installation of both roof vents and inlet louvers, the movement of air will flow from the lower cooler air entering below and rising as it is heated within the greenhouse to escape through the roof vents (Figure 19.22). Wind passing over the open roof vents also creates a pressure difference that acts like a vacuum and sucks the heated air out of the vents. This movement of air with the temperature gradients exchanges the air within the greenhouse adding carbon dioxide as well as maintaining optimum temperatures.

If you live in a region where summer temperatures are very high, you may install an exhaust fan and inlet shutters to force the air out of the greenhouse (Figure 19.23). This forced ventilation should exchange the entire air volume of the greenhouse within 1 min to minimize temperature gradients from one end to the other. If the

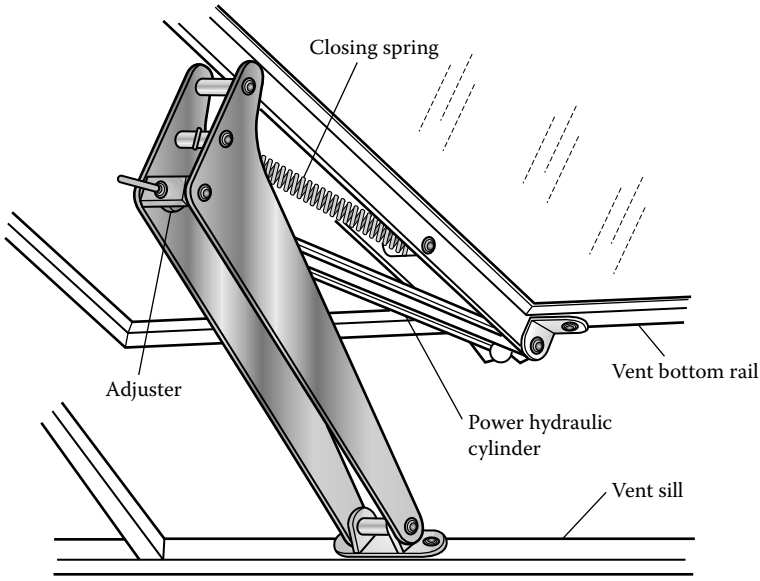

FIGURE 19.21 Roof vent and opener. (Drawing courtesy of George Barile, Accurate Art, Inc., Holbrook, New York.)

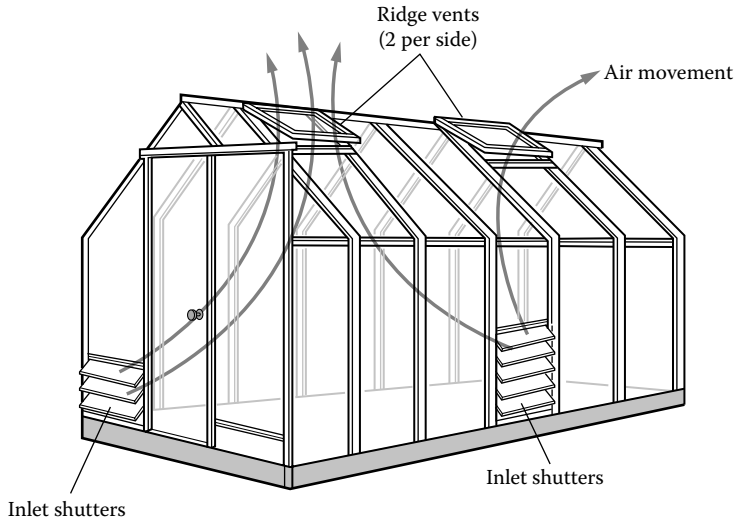

FIGURE 19.22 Natural air circulation within a greenhouse. (Drawing courtesy of George Barile, Accurate Art, Inc., Holbrook, New York.)

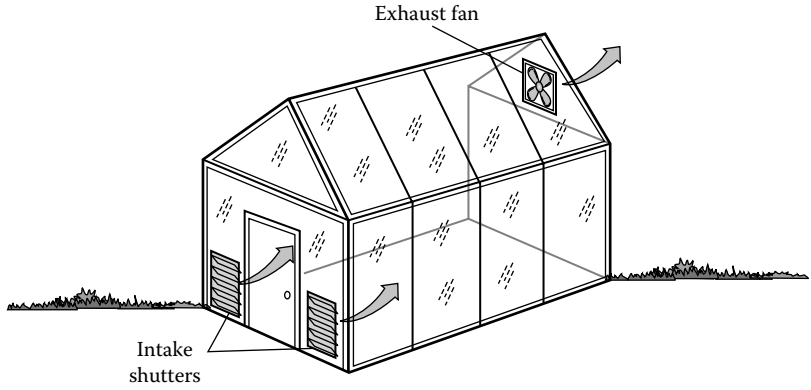

FIGURE 19.23 Forced ventilation with exhaust fan and intake shutters. (Drawing courtesy of George Barile, Accurate Art, Inc., Holbrook, New York.)

exhaust fan is operating, roof vents must be closed to prevent the air from short circuiting down from the roof vents directly outside the fan without being forced through the crop. To determine the size of the exhaust fan and shutters needed, you must calculate the total air volume of the greenhouse and express it as cubic feet of air per minute (CFM). The total volume of air is the width × length × height of the greenhouse. The industry uses a factor of 10 ft times the width × length or 12 ft times the width × length for more southerly locations. Using our example earlier for heating, the greenhouse was 10 ft × 12 ft so the total CFM calculation is: 10 ft × 12 ft × 12 ft = 1440 CFM. Or we can take the total area of the gable end of the greenhouse

and multiply it by the length (12 ft) as follows: The gable end area was 150 sq ft. Multiply that by the 12-ft length: 150 × 12 = 1800 CFM.

Now refer to charts of various sizes of fans and shutters to determine the model of exhaust fan needed. Then, match the total CFM output of your selected exhaust fan to the CFM ratings for the shutters. There will be one exhaust fan and two inlet shutters. Shutters are square in dimension starting at the smallest ones 12″. The next are 16″, 18″, 20″, 24″, and up to 54″. A 16″ shutter has a capacity of close to 900 CFM, so two of those would be adequate. The next size, 18″, is rated at 1125 CFM. When purchasing an exhaust fan, it is best to have a two-speed motor activated by a two-stage thermostat so that as the temperature rises in the greenhouse the first thermostat setting operates the slower motor speed and as temperature continues to rise the second setting would initiate the faster motor speed. Set the two ranges at least 5°F (2.8°C) apart.

Another method of cooling is to prevent some of the direct sunlight from entering the greenhouse by use of a shade cloth over the top of the greenhouse. Usually, 35% shade is adequate. This would only be used during the hottest time of the year when most sunlight occurs. You can also white wash the outside of the covering with a special white paint that can be easily removed by washing. It generally has a life expectancy of 3–4 months so that it is easily removed by late fall when the sunlight is no longer intense and when you then need as much light as possible as the season progresses into winter.

Evaporative cooling pads are also effective in lowering very high temperatures under low ambient relative humidity (RH). Evaporative cooling pads would be positioned on one end of the greenhouse opposite the exhaust fans. In that case you would need two exhaust fans near the door end and have the cooling pad on the opposite gable end. Still another system is to use high-pressure fogging. The fogging misters are mounted within the greenhouse. Their efficiency, like the evaporative pads, depends upon low ambient RH. I do not recommend these evaporative cooling systems for small greenhouses as they are costly.

An article on greenhouse ventilation by the University of Connecticut states that fan ventilation can consume from 0.5 to 1 kilowatt hour (KWH) per square foot of greenhouse area per year. So the potential annual cost for the 120 sq ft hobby greenhouse example would be: 120 KWH × $0.10 = $12.00.

For more accurate calculation of a given location, use the number of days of sunshine obtained from the weather data. During those sunny days use about 8 h per day as that is when the light would be most intense. This would be only for the months from May through September when day length is longest and temperatures highest.

For our example greenhouse, a 16–18″ exhaust fan would give adequate ventilation of 1200 CFM. This type of fan has a 1/10th HP (horsepower) motor that uses 110/120 volts (V) and draws 1.5 amperes (I) of current. The power law is: P (watts) = Voltage (V) × Current (I). Therefore, the power utilized per hour of fan operation is: P = 110 × 1.5 = 165 watts per hour.

To operate this fan for 8 hours it would consume: 8 × 165 watts = 1320 watts or 1.32 kilowatts per day or 1.32 KWH per day. If the cost of power is $0.10 per KWH, the daily cost would be 1.32 × $0.10 = $0.13. If the number of full sunlight days is 20 days per month over this period May through September (5 months), the total power consumption for the period would be 5 months × 20 days × 1.32 KWH = 132 KWH. The cost based on $0.10 per KWH would be $0.10 × 132 KWH = $13.20.

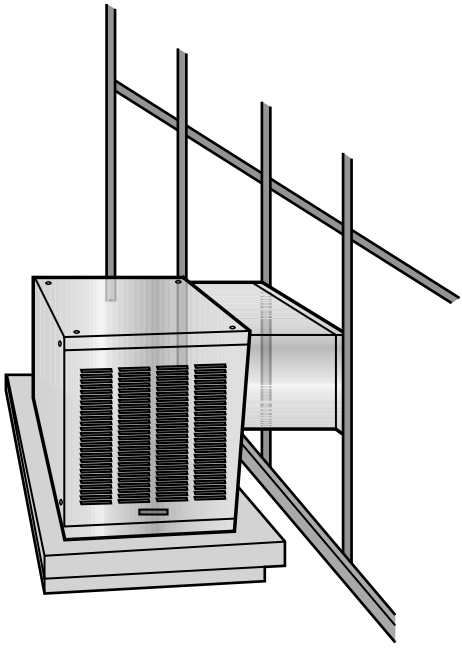

FIGURE 19.24 Evaporative cooler unit. (Drawing courtesy of George Barile, Accurate Art, Inc., Holbrook, New York.)

A more effective cooling system for a backyard greenhouse is a greenhouse evaporative swamp cooler (Figure 19.24). This combines the exhaust fan and cooling pad within one unit. It draws hot outside air through evaporative cooling pads within the unit using a blower. As the water evaporates it takes the heat out of the air, resulting in pushing cool air into the greenhouse. This is a positive pressure system whereby the cooler pushes air into the greenhouse and allows it to exit through roof vents or exhaust shutters (Figures 19.25 and 19.26). When using an exhaust fan, it sucks air into the greenhouse through inlet vents and expels the hot air out. The positive pressure method is much superior as it also assists in preventing insects from entering the greenhouse.

Note that the evaporative cooler is mounted close to the base of the greenhouse to bring in the coolest air possible and the exhaust shutters are mounted high near the height of the eaves to expel hot air (Figure 19.26). The exhaust fan, on the other hand, is installed high near the eaves height (Figure 19.23) with its intake shutters mounted low within a few feet of the ground to bring in cool air. The swamp cooler pushes out heated air via the exhaust shutters or roof vents (Figures 19.25 and 19.26) while the exhaust fan sucks in cool air at the base of the greenhouse and exhausts it higher at the eaves height (Figure 19.23).

The amount of cooling provided through evaporation is a function of the ambient RH. The lower the outside RH, the more cooling capacity is available by evaporation. When the RH is lowest during the hottest times of the day, the air temperatures can be reduced significantly within the greenhouse. For example, if the outside temperature is 88°F (31°C) and the RH is 54%, the cooled air temperature entering the greenhouse

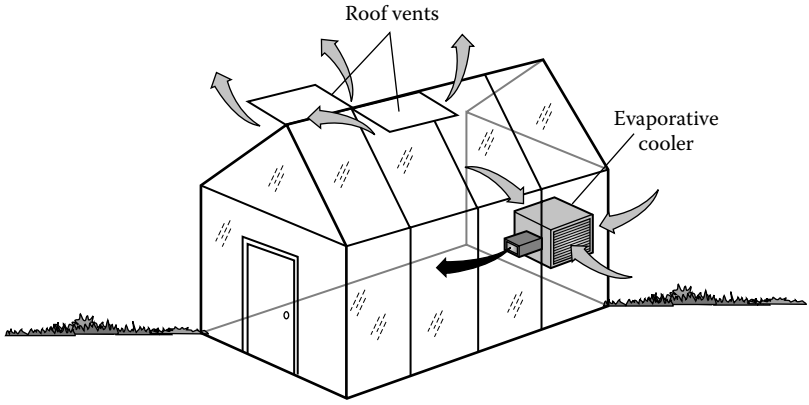

FIGURE 19.25 Evaporative cooler with roof ridge vents. (Drawing courtesy of George Barile, Accurate Art, Inc., Holbrook, New York.)

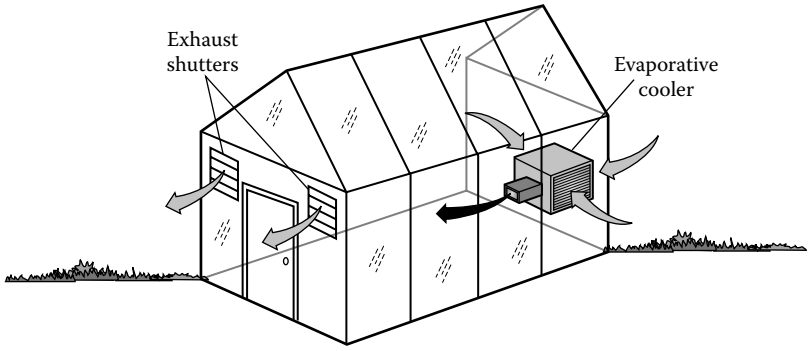

FIGURE 19.26 Evaporative (swamp) cooler with exhaust shutters. (Drawing courtesy of George Barile, Accurate Art, Inc., Holbrook, New York.)

will be 78°F (25.5°C). Similarly, with an outside temperature of 106°F (41°C), RH of 38% the air temperature after cooling would be 78°F (25.5°C). However, with a combination of high temperatures and RH, the cooling capability of the evaporative cooler is reduced since little water will evaporate as the ambient RH approaches 85%.

The size of evaporative cooler needed for the example hobby greenhouse is determined by the total CFM as for the earlier exhaust fan. The evaporative cooler comes with a two-speed fan, and can hence service from 1400 to 2800 CFM. A model to satisfy this need has one-eighth HP, is 110/120 volts, and draws 5.4 amperes. As a result, this unit will consume more power than an exhaust fan system. The power consumption is: P = VI; P = 110 × 5.4 = 594 watts. Cost per 8 h of operation is 594 × 8 = 4752 watts or 4.75 KW. That is 4.75 KWH per day. For the 5-month cooling period of the year, the total power usage is 100 sunny days × 4.75 KW = 475 KWH. The cost would be \$0.10 × 475 = \$47.50.

The intake shutters or exhaust shutters can operate on the pressure differences from the fans or they may be equipped with a small motor to open and close them

in coordination with the operation of the exhaust fan or evaporative cooler blower. The shutter motors are very small drawing about 0.17 amperes at 120 volts for some models. The operational cost of two shutters is much less than the exhaust fan. Projected power and costs are as follows: P = VI; P = 120 × 0.17 = 20 watts. For two shutters that is 40 watts. Total power consumption for the 5-month period is 100 × 8 × 40 = 32 KWH. The cost would be $0.10 × 16 = $3.20 for the season.

TOTAL ESTIMATED HEATING AND COOLING COSTS

Heating: $876.00
Cooling: $13.20 (for an exhaust fan and automatic shutters not motorized)
Cooling: $47.50 (for an evaporative cooler and non-motorized shutters)
Motorized shutters: $3.20

The total cost is either $926.70 for an evaporative cooler with motorized shutters or $889.20 for an exhaust fan with automatic shutters (not motorized). Even these two systems are not significantly different in the annual cost for temperature control.

POTENTIAL ANNUAL PRODUCTION

Overall, the cost of heating and cooling would be covered by the value of the vegetables. The expected annual yields from the greenhouse production of vegetables are dependent upon the amount of sunlight the plants will receive. The following yields are based upon commercial greenhouse production in the Vancouver, BC area, which is very similar to Seattle, WA, the location of our earlier example. Table 19.3 gives annual production per crop and in the last two columns are projections for a combination of crops in a 10 ft × 12 ft backyard greenhouse. Herbs

TABLE 19.3
Potential Annual Production in a 10 ft × 12 ft Greenhouse

Crop	Area/Plant (Plt)	Crop Life (Days)	Crops/Year	Annual Pdn/Plt	No. of Plts	Annual Yield (lbs)
Tomatoes	3.5 sq ft	9 months	1	40 lbs	12	480 lbs
Peppers	3.5 sq ft	9 mo.	1	30 lbs	8	240 lbs
European Cucumbers	9 sq ft	3–4 mo.	3	100 lbs	2	200 lbs
Eggplants	3.5 sq ft	3–4 mo.	3	20 lbs	2	40 lbs
Lettuce (Bibb or Leaf) (Raft)	4 plts/sq ft	30 days	11–12	11–12 Head/Yr.	48	528–576 head
Herbs (Plant Towers-PT)	44 plts/10 sq ft	9 mo. (3wks/cut)	1 crop (12 cuts/year)	¼ lb/year (depending on type of herb)	44	11 lbs
Arugula, Basil (PT/Raft)	4 plts/sq ft (Raft)	30 days	11–12	11–12 head	—	—
	44 plts (PT)	3 mo.	4	4 oz/crop/plt	44	44 lbs

should be grown in plant towers to increase the production per square foot of greenhouse area.

TYPICAL CROP LAYOUT PLAN (10 FT × 12 FT GREENHOUSE)

In a 10 ft wide by 12 ft long greenhouse, there will be three beds. There is one on each side and one in the center of the greenhouse. The two side beds are 12 ft long and the center one is 9 ft long to permit entrance from the door that swings outward. A 2-ft wide aisle is allowed for access between the beds. Vine crops are supported vertically from support cables attached by eye hooks and turn buckles along the roof frame. Bolt the eye hooks and turnbuckles into the aluminum ribs of the greenhouse. Plastic vine twine supports the vine crops from the overhead cable with special hooks with additional string called "Tomahooks."

In a 10 ft × 12 ft greenhouse, we may grow 12 tomatoes on one side in either bato buckets or rockwool/coco coir slabs. Details of the hydroponic crops and their growing systems are given in Chapter 20. The central bed contains two European cucumbers, eight peppers, and two eggplants. Due to the large size of eggplants, grow one plant per pot. The other area of 2 ft × 12 ft has two plant towers with herbs in the one, and basil and arugula in the second one. The remaining 2 ft × 6 ft is for a floating raft-culture system. It is used for lettuce. The raft system can fit 48 head of lettuce. Lettuce, arugula, and basil may be grown in either NFT or raft culture. Alternatively to the plant tower, the arugula and basil could be grown in the raft culture system in place of some lettuce. The production for the greenhouse is summarized in Table 19.3. The projections use plant towers for herbs, basil, and arugula. A plan for these crops is given in the diagram (Figure 19.27).

CONTROL PANEL

Cut and paint a piece of ¾″ thick plywood for a backing for all of the controls as shown in the diagram (Figure 19.28). The length must be sufficient to span across two of the greenhouse vertical frame bars along the back end wall near the nutrient tank. Make it at least 2 ft wide to fit the components. Locate it opposite one of the aisles for easy access and at a height just above the irrigation header. The electrical cable from your residence enters at the back wall of the greenhouse behind the nutrient tank and is connected to a breaker panel. The breaker needs a 220 volt, 30-amp circuit for the electric heater, four 110 volt, 15-amp circuits for outlet socket boxes, and two time-clocks. From the breaker panel, using electrical conduit or other approved water-proof cable, place three dual socket outlets for the exhaust fan, and three 8-ft, dual tube, high output fluorescent lights. One time-clock operates the lights and the other time-clock is wired directly to another circuit that has a dual outlet box for the pump. The outlet for the 220-volt heater is wired directly into the 220 volt, 30-amp circuit of the breaker panel. The heater has its own built-in thermostat. The exhaust fan is operated by a thermostat hung in the middle of the greenhouse. The control panel will keep all the wiring neat and all controls centralized for easy operation. This arrangement of components for a backyard greenhouse is shown in Figure 19.29.

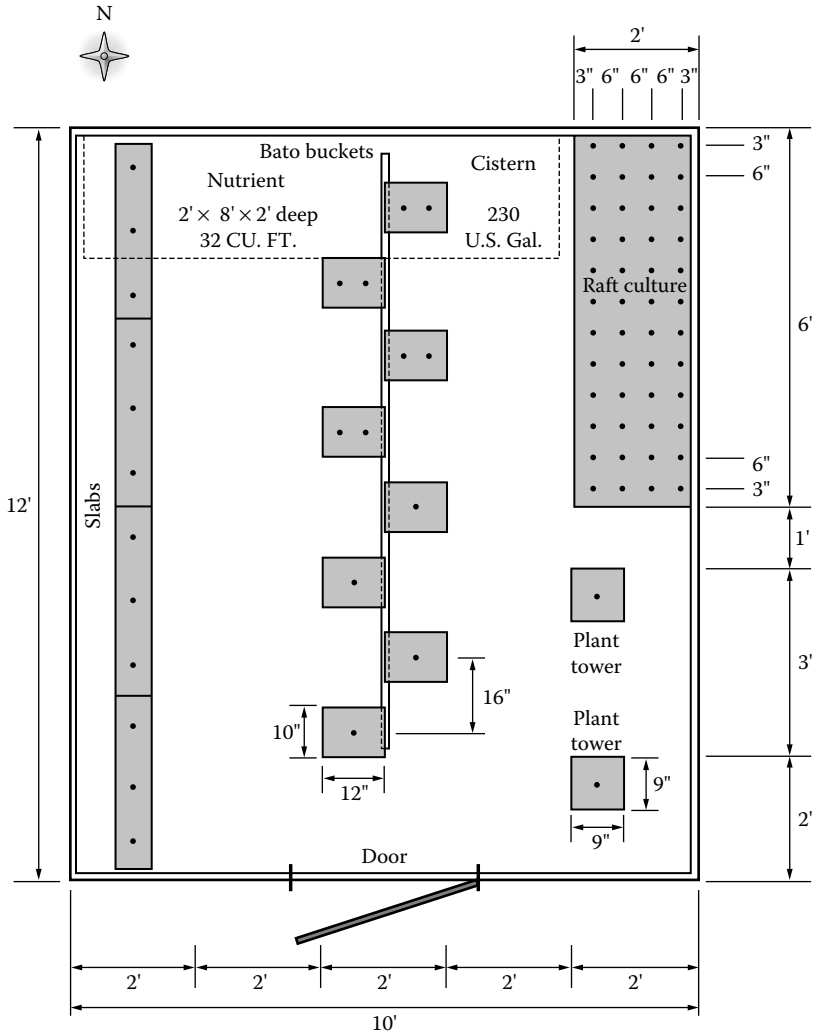

FIGURE 19.27 Crop plan for a backyard greenhouse with hydroponic systems. (Drawing courtesy of George Barile, Accurate Art, Inc., Holbrook, New York.)

As mentioned earlier under "Site Preparation," lay the approved underground cable before starting the preparation of the greenhouse base. If a propane or natural gas heater is used instead of the electrical heater, the electrical circuit for the greenhouse can be reduced to 60 amps. If natural gas is to be used, it will have to be installed according to local codes by an approved gas installation company. The trench for the placement of the electrical line may be able to also contain a water line for the greenhouse. Again, local codes dictate the depth of these trenches and what utilities may be placed together. A water line of ¾″ black poly tubing approved

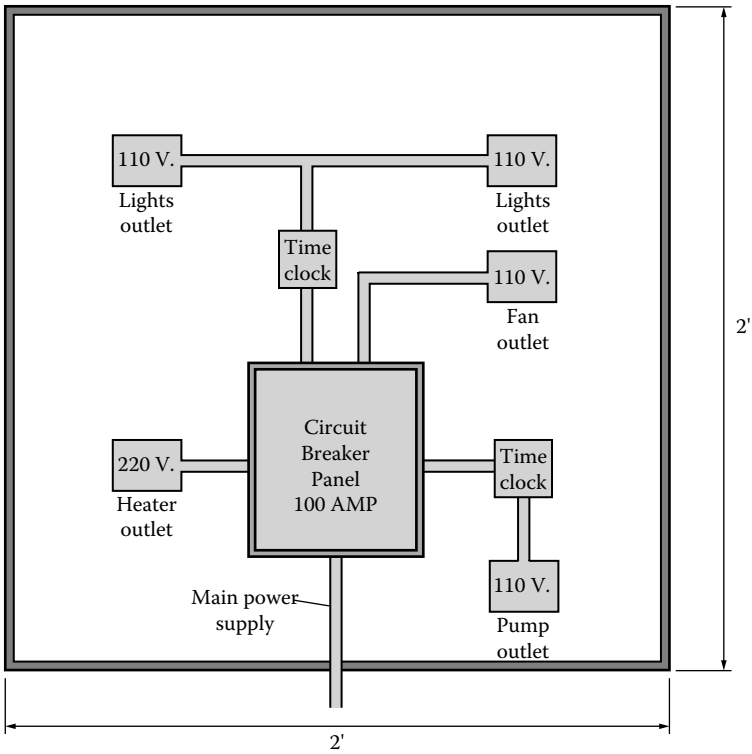

FIGURE 19.28 Control panel layout. (Drawing courtesy of George Barile, Accurate Art, Inc., Holbrook, New York.)

for the pressure of your water source would be adequate for the greenhouse usage. Natural gas heating would be the most efficient and lowest cost form of heating.

PROJECTED ANNUAL REVENUES

Combining the projected annual production in Table 19.3 with an expected price to purchase the product in a supermarket, the overall revenues are given in Table 19.4.

The revenues, of course, make the assumption that you would consume that amount of salad crops a year. Most of these products could be consumed by a family of four to six people providing they are much focused on eating vegetables as an important part of their diet. The lettuce is more than would be needed, so the arugula and basils could be grown in the raft system with the lettuce and the second plant tower freed up for more herbs, bok choy, chard, spinach, and even some flowers such as viola, nasturtiums, petunias, marigolds, and so on, that normally do well in hanging baskets. The bok choy and chard could also be grown in the raft system replacing some of the lettuce. If this is still too much produce, share it with relatives and/or neighbors. You might even sell some to them at a discounted price from that of the supermarket.

FIGURE 19.29 Greenhouse with hydroponic and environmental control components. (Courtesy of Resh Greenhouses Ltd., Vancouver, British Columbia, Canada.)

TABLE 19.4
Projected Annual Revenues in a 10 ft × 12 ft Greenhouse

Crop	Annual Yield	Weekly Production	Unit Price	Annual Revenues ($)
Tomatoes	480 lbs	9.2 lbs	$2.00	$960
Peppers	240 lbs	4.6 lbs	$4.00	$960
European Cucumbers	200 lbs	3.8 lbs	$1.50	$300
Eggplants	40 lbs	0.77 lbs	$1.50	$60
Lettuce	550 head	11 head	$1.50	$825
Herbs	11 lbs	3.4 oz	$20.00	$220
Arugula, Basil	44 lbs	6.8 oz	$10.00	$440
Total				$3765

20 Hydroponic Systems for Backyard Greenhouses

INTRODUCTION

Most hydroponic systems are adaptable to small-scale backyard greenhouses. However, not all are practical. The choice also depends upon the crop grown. Lettuce, arugula, bok choy, basil, and some herbs do best in a nutrient film technique (NFT) or raft culture system. Vine crops prefer pots or slabs of perlite, coco coir, rockwool, or mixtures of these substrates. To increase the production of low-profile herbs, bok choy, and strawberries, plant towers are the preferred system using peat, perlite, coco coir, or mixtures of these media. Usually in a backyard greenhouse, we wish to grow most of these crops together. The first step then is to determine how much of each crop you like in your salads on a weekly or monthly basis. Next, is to decide on the best system to use for each crop and how much area is to be occupied in the greenhouse by each with its hydroponic system. Finally, make a detailed plan of the location of each crop in the greenhouse and the specific area occupied by each one.

Hobby greenhouses come in many dimensions as was described in Chapter 19. The width limits the number of plant rows or beds that it can contain. Greenhouses of 8-ft width will fit two beds, and 10–12-ft wide greenhouses have three beds. The center of the greenhouse is 9-ft to 10-ft high from the base. If the structure has the base (sills) set on a concrete block foundation, the height may be raised several more feet. This extra height helps greatly to accommodate tall vine crops. Locate European cucumbers, peppers, and eggplants in the center bed of the greenhouse where the height is greatest, as these plants are difficult to lower. Tomatoes can be located on one of the side beds and low-profile plants and plant towers on the other side and as shown in the crop plan of the last chapter (Figure 19.27).

HYDROPONIC SYSTEMS

Slabs

Pre-wrapped rockwool and coco coir slabs are available at hydroponic shops or online. They come in widths of 6″, 8″, and 12″ by 3″ thick by 3 ft long. They cost $6–7 each. I highly recommend purchasing these slabs instead of making them from polyethylene. Especially the coco coir slabs as they will be leached to remove any sodium chloride from the substrate. Rockwool slabs are only available as wrapped. The slabs are roughly 3 ft long. Four slabs will make up a 12-ft row to fit in a hobby

greenhouse of 12-ft length. If you wish to grow all vine crops using only slabs, four will fit on each side and three in the center row of the greenhouse. The slabs are perfectly suitable for low-profile plants. Simply make the plant holes at 6″ centers within the slabs and place three rows of slabs (using 6″ wide slabs) 3″ apart to get a 24″ growing bed. The disadvantage of using the slabs instead of raft or NFT for low-profile plants is the high cost of the slabs. To obtain a growing area of 2 ft wide by 9 ft long a total of 3 × 3 = 9 slabs would be needed. The cost would be approximately $60. In addition, it is difficult to re-use the slabs for more than two to three crops as they may become contaminated and/or get damaged physically during the harvesting of the plants. That would result in replacing the slabs 5–6 times a year so the cost could escalate to $300–350 annually. For these reasons, stay with the conventional methods of growing specific crops.

For tomatoes, peppers, and eggplants locate three plants per slab (Figure 20.1). That is 12 plants per row of four slabs. Space the plants within a slab at 6″ from each end with one in the middle. For European cucumbers transplant two plants per slab, one at 9″ from each end of the slab and space the slabs 6″ apart end-to-end. Then, in a 12-ft row there would be three slabs instead of four slabs as with the tomatoes, peppers, or eggplants. That would give six cucumber plants per row.

The slabs are set on top of a 1–2″ thick Styrofoam sheet to insulate the roots from the cold floor of the greenhouse (Figure 20.2). Alternatively, construct raised beds to set them on, but that will take away from the overall height to train the plants. Cover the Styrofoam insulation with black polyethylene plastic to permit drainage

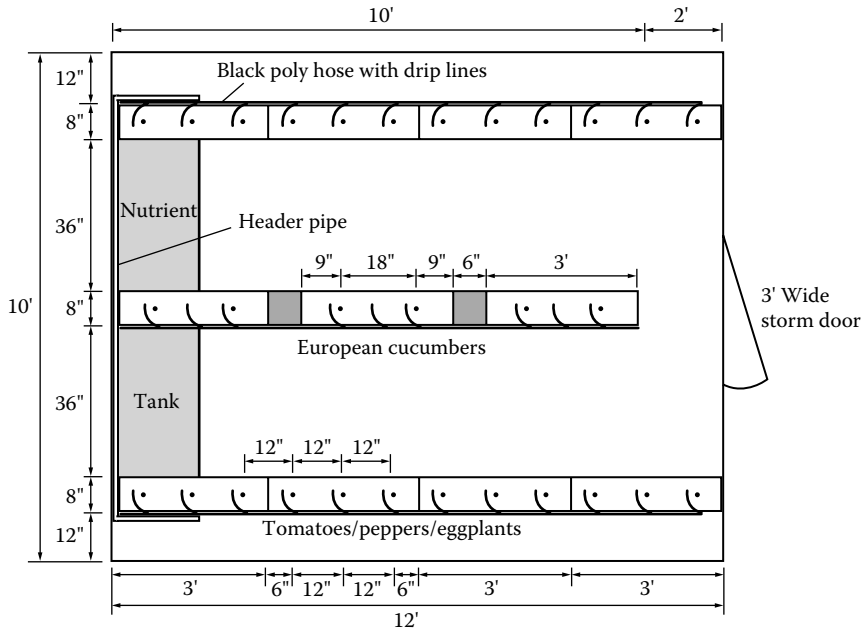

FIGURE 20.1 Plant spacing in slabs of various vine crops in a 10 ft ⊠ 12 ft greenhouse. (Drawing courtesy of George Barile, Accurate Art, Inc., Holbrook, New York.)

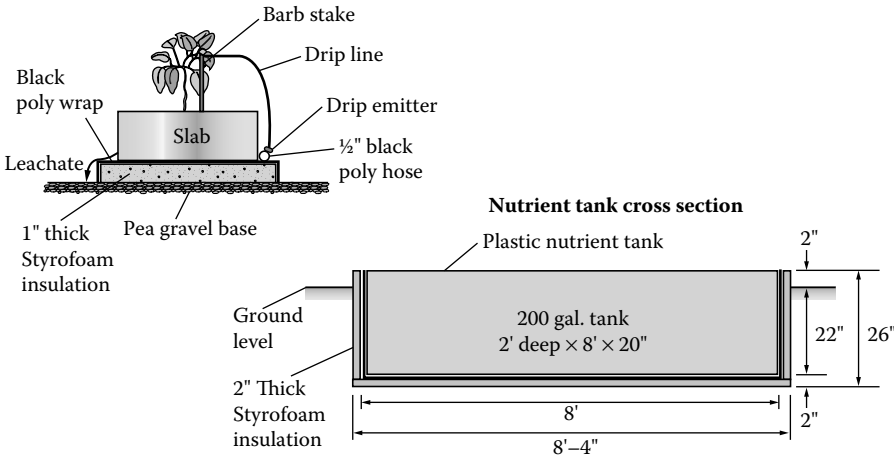

FIGURE 20.2 Open system of slabs on Styrofoam insulation and sunken nutrient tank. (Drawing courtesy of George Barile, Accurate Art, Inc., Holbrook, New York.)

to occur over the sides of the Styrofoam to minimize the growth of algae. This is an open system as shown in the diagram. To construct a re-circulation system to collect the leachate and return it to the cistern tank, use rigid plastic channels. These channels are available from hydroponic shops or online. Place the channel on top of the Styrofoam insulation, sloping it about 4% back to the cistern.

You could also construct beds from plywood and a steel-frame. Make low beds to get a slope of 3% back to the cistern. That is a 4–5″ slope back to the top of the cistern. The bed would be 6″ high at the entrance end of the plant row sloping to the cistern having 2″ of freeboard (above ground level). Make the bed with 2″ sides using 1″ × 2″ lumber. Construct the width 2″ wider than the slab width. Using 8″ wide slabs make the width of the bed 10″ (inside width). Cut the Styrofoam the same width as the slabs as they will sit directly on top of the Styrofoam. Staple 6-mil thick black polyethylene at the top edge of one side of the bed, bring it over the Styrofoam and push it between the Styrofoam and the other edge of the bed to form a channel where the leachate can run along and enter the cistern at the lower end as shown in Figure 13.22. Staple the other side of the black polyethylene liner to the upper edge of the bed side.

Bato Buckets

Bato buckets are special pots designed in Holland for coarse media such as perlite, expanded clay rocks, or pea gravel. With these coarse substrates, the bato bucket maintains about 2″ of solution at the bottom. This level of solution is regulated by a siphon pipe. The bato buckets sit on top of a 1½″ diameter PVC drain pipe. Holes of 1″ diameter are drilled into the top of the drain pipe to fit the siphon elbow from the base of the bato bucket. The holes are spaced at 16″ centers along the drain pipe. Begin the first hole about 8″ from the end of the drain pipe to allow a cap at the end

of the drain pipe. Do not glue the cap as that is access to clean out the drain pipe. The drain pipe lies on the greenhouse floor with a very slight slope back to the cistern by adding some pea gravel under the pipe and pots. Bato buckets cost about $6.50 each and can be re-used between crops for at least 5 years. Clean them between crops with a 10% bleach solution by soaking them for 1 h or slightly longer.

Eight bato buckets in 10–12 ft will give adequate plant spacing (Figure 19.27). Each bucket will hold one European cucumber or two of tomatoes, peppers, or eggplants. Usually it is better to plant one eggplant per bucket as eggplants have large leaves that intercept more light than tomatoes or peppers. Other low-profile crops such as herbs, lettuce, arugula, basil, bok choy, cabbage, cauliflower, broccoli, green onions, bush beans, and many more can be grown in bato buckets. Between crops simply sterilize the pots and replace new substrate. They are more economical than slabs to grow these crops since only the substrate needs replacement between cropping cycles. Herbs, of course, can be harvested for up to 10 months, depending upon the herb's growth cycle. Even strawberries would grow in bato buckets. During the hot weather seasons from late spring to early fall, grow cool-season crops such as cabbage, cauliflower, and broccoli outside in your soil garden as the greenhouse would be too hot for them at that time of the year.

Plant Towers

Plant towers increase the number of plants that can be grown in a unit area of the greenhouse compared to ground-level beds. Usually, at least 6 times the production is achieved in plant towers compared to ground beds. Other advantages include easy maintenance and harvesting of the plants, clean product as the crop is above the ground level, and the solution can be re-cycled. The dimensions of the Styrofoam pots for the plant towers are 9″ × 9″ × 8″ tall. Each pot is specially designed so that the pots sit one on top of the other without nesting by fitting their bases into four cuts in the lip of the pot below. This is a patent design. The pots are sold by Verti-Gro, Inc. in Florida (see Appendix) at a price of $4.50 each. They will easily last 5 years. The bottom pot should sit on top of a collection pot that returns the solution back to the cistern via a 1½″ drain pipe. Stack up to seven pots or more depending upon the greenhouse roof height. A galvanized electrician's conduit with a 1″ diameter PVC sleeve supports the pots vertically. Secure a support cable on the ribs of the greenhouse centered directly above the row of plant towers. The conduit is attached to the cable to keep the plant towers vertical. The remaining details of setting up the plant towers were given in Chapter 13, on "Plant Towers" including Figures 13.26 and 13.27. For only two plant towers as in Figure 19.27 of the greenhouse crop layout, let the plant towers drain to waste.

Plant towers are best for herbs, bok choy, and flowers such as marigolds, nasturtiums, viola, petunias, and all hanging-basket type of flowers. Do not use them for lettuce as harvesting often and changing the plants is a lot of work, nonetheless, the towers will produce very nice lettuce. Do not grow any vine-crops or even bush-type tomatoes, peppers, eggplants, and so on as these plants cast a lot of shade on the ones immediately underneath causing very poor yields in the lower plants. A detailed description of the irrigation system follows under that section of this chapter.

Raft Culture

This hydroponic system is best for lettuce, basil, arugula, and some herbs. It can easily be set up in a backyard greenhouse. In our example, a raft system could occupy the bed area along one side or in the center as a full bed length or a portion of it. The first step is to decide on how many lettuce, basil, arugula, and some herbs are eaten weekly. From this extrapolate, the area of raft culture needed to fulfill your requirements assuming the cropping cycle for these plants is about 6 weeks. Spacing of these plants is 6″ × 6″ so you will get four plants per square foot of the bed surface area. As shown earlier in the plant layout (Figure 19.27), 48 plants will fit in a bed 2 ft wide by 6 ft long. The raft system is self-contained so its operation is independent of the other hydroponic systems in the greenhouse. It will have an air pump above the bed that circulates air by a poly hose to air stones in the pond. Locate the air pump above the top level of the pond in case it should stop and thus not allow solution to flow back to the pump. These components and supplies are available from an aquarium store or Aquatic Eco-Systems, Inc. in Florida (see Appendix).

In northerly climates with cold soils, especially during the winter months, low temperatures will chill the nutrient solution below optimum of the raft system, which is about 65–68°F. Even in the greenhouse with a weed mat and gravel base as described in the preparation of the site for the greenhouse in Chapter 19, the cold will affect the temperature of the nutrient solution. For this reason, place a 2″ thick Styrofoam board under the area where the raft pond is to be built. During long-term cold periods, the solution may have to be heated with an immersion heater.

Construct the sides of the pond with 2″ × 10″ treated lumber. Set these sides on top of the Styrofoam. In constructing one of the side beds of the greenhouse, make the inside dimensions 48½ wide by a length 4″ less than the inside length of the greenhouse. When cutting the Styrofoam boards (rafts) allow at least ½″ play (less length than the inside length of the bed). Screw the lumber together with stainless steel screws and glue the joints. Set the perimeter frame on the Styrofoam and then install a 20-mil swimming pool liner, folding the corners similar to making a parcel followed by nailing the top edge onto the wood frame using a cedar wood lathe or aluminum angle as shown in Figure 13.2.

The Styrofoam boards can be either 2 ft × 4 ft or 4 ft × 4 ft in dimensions. Make the holes for the transplant plugs at 6″ × 6″ spacing starting 3″ from the edge of the boards as shown in Figure 13.4. Each 4 ft × 4 ft board should hold 64 lettuce, arugula, or basil plants. It is easier to handle 2 ft × 4 ft boards especially when harvesting as the plants weigh up to 6–8 ounces or more each. With fewer plants, it is unlikely that the boards will break from the weight as occurs with 4 ft × 4 ft boards.

Ebb and Flow Pot System

This system was discussed in Chapter 13. Several types of these systems are available commercially on the Internet or at hydroponic shops (see Appendix). Some of the systems use a substrate such as expanded clay aggregate, coco coir, perlite, granular rockwool, and mixtures of coco coir, perlite, and rice hulls combined at different ratios. The expanded clay aggregate gives best drainage, is inert and pH neutral. It

is re-usable by cleaning and sterilizing it between crops using a 10% bleach solution or hydrogen peroxide followed by rinsing. However, with subsequent cropping roots may enter into the clay particles and make it difficult to sterilize. This substrate can easily be replaced with new between crops.

Most of the ebb and flow systems use 5-gal buckets or some form of growing pots of that volume. The pots have a felt or screen liner bag that contains the substrate to prevent clogging of the drain outlet as particles may come off the substrate with continued irrigation and drainage cycles during the cropping period.

The components of the system include a large nutrient solution reservoir of 50 gallons or larger. A submersible pump operated by a time-clock that pumps water from the storage tank to a smaller distribution reservoir of about 5–10 gal is shown in Figure 20.3. The inlet line is attached to a float valve (also acts as a safety backup) that regulates the inflow of solution to the distribution tank. From the distribution tank, a ½″ black poly tubing connects to each grow pot. As the solution flows to the distribution tank, it also flows by gravity to each grow pot filling it from the bottom. There are basically two systems, one the fill-up system and the other the drainage system (Figure 20.4). During the fill cycle, a timer activates the pump in the large reservoir and the solution flows to the distribution tank. On the return cycle, a second time-clock activates the pump in the distribution tank to pump the solution back to the main reservoir as the first timer shuts off the pumping cycle to the distribution tank. The two timers are synchronized so that as one is operating the other is off. The solution flows back from the grow pots to the distribution tank where it is pumped back to the solution reservoir. A second float switch on the bottom of the distribution tank will sense when the growing pots are empty to stop the drain pump from operating even if the return cycle timer is still activated. Ebb and flow cycles are timed according to the plant water needs. The fill and drain cycle levels may be regulated by electronic sensor switches that operate the pumps via a controller. This system was also discussed earlier in Chapter 13.

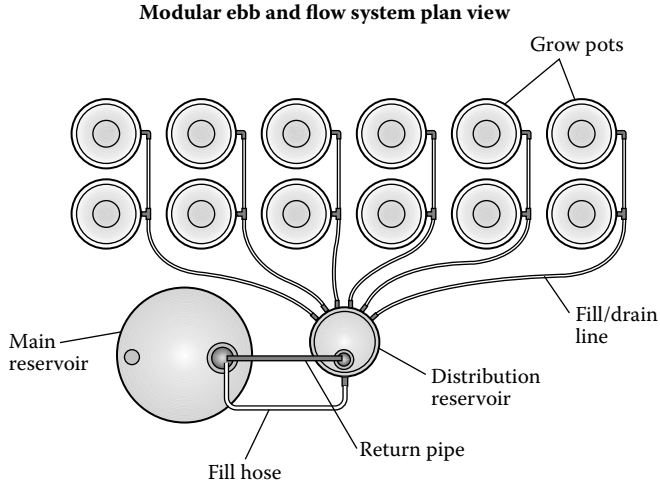

FIGURE 20.3 Ebb and flow plan of 12-pot setup. (Drawing courtesy of George Barile, Accurate Art, Inc., Holbrook, New York.)

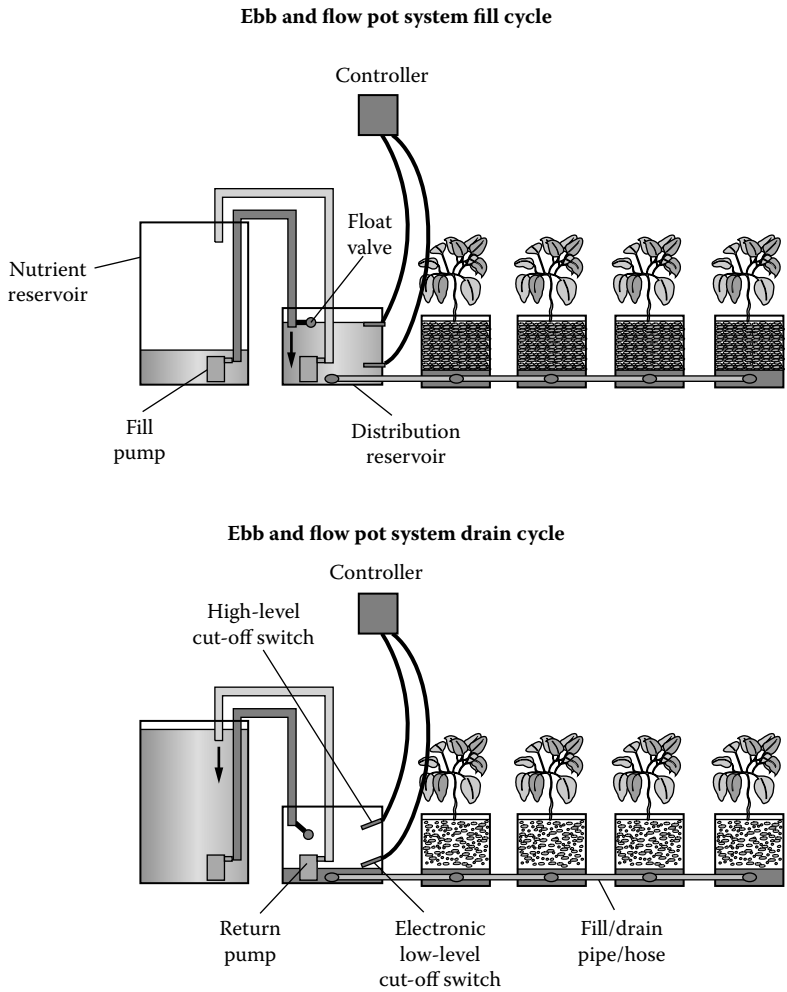

FIGURE 20.4 Ebb and flow system filling and draining cycles. (Drawing courtesy of George Barile, Accurate Art, Inc., Holbrook, New York.)

An option to this ebb and flow system is to use a top feed drip irrigation system. The grow pots are set up similar to the ebb and flow system with a drain tube connecting each pot to the distribution tank. Two float valves or electronic switches, one at the lower limit and the other at a high limit will operate the submersible pump that conducts the solution back to the nutrient reservoir as it returns from the grow pots. The difference in this system is that the submersible pump in the main solution reservoir irrigates the grow pots directly by a drip irrigation system rather than pumping to the distribution tank.

The system may be set up as a closed system whereby the returning solution is collected and conducted back to the distribution reservoir where it is pumped back to the main reservoir. Otherwise, with an open system there would not be a return

drain line to a distribution reservoir, the leachate would drain to waste through the greenhouse floor.

Ebb and flow systems are available that use no substrate making them more of a water culture system (see Current Culture H2O in Appendix). The principles of operation are very similar to the one just described, but without a medium, growing the plants in an 8″ net pot that is irrigated from below. Nonetheless, even with this system it would be better to use expanded clay in the net pots. In that way, the transplants are kept higher in the pots so that their crowns are above the upper water level at all times.

Drip Irrigation System

A drip irrigation system is the basis of most hydroponic cultures. The specific cultures including coco coir, expandable clay, peatlite, perlite, rice hulls, rockwool, sand, sawdust, and various mixtures of these all use drip irrigation. The various cultures may be named by the substrate used, but overall they are all drip irrigation systems. While most commercial drip irrigation systems use an injector/proportioner component, in backyard greenhouses it is more economical to use a nutrient tank of normal strength solution than stock tanks of concentrated solution that is diluted by the injector. The drip system may be an open to waste or a re-circulation design. I recommend using a closed (re-circulation) system to prevent the solution from draining directly below the greenhouse, which may cause a moisture build-up, especially in northern climates during the winter months. When you change the nutrient solution it may be pumped to your garden and landscape plants, especially when those plants are actively growing.

The first component is a nutrient reservoir. In a backyard greenhouse with the peak being relatively low at about 9 ft, it is better to keep the plant growing systems at floor level. Locate the nutrient reservoir at the end of the greenhouse opposite the entrance door. Set the reservoir into the ground so that the top is 2″ above the floor of the greenhouse (Figure 20.5). Purchase a plastic tank of approximately 200–250 gal in volume, but it must not be a tall tank to facilitate burying it. Additionally, if the greenhouse is located in an area of high groundwater table, it could cause the tank to collapse. A more ideal tank is a rectangular one of about 18–20″ wide by 2 ft deep by 8–9 ft long. If you cannot locate such a tank, use a number of plastic storage tanks and join them by bulk-head fittings at the bottom of the sides. In that way, the modular tanks will in effect be one. Place 2″ thick Styrofoam on the bottom and around the sides of the excavated area between the soil and the tank to insulate it from the cold soil during winter months. Construct a cover of ¾″-thick plywood. Seal it with oil-based paint.

The rest of the system includes a pump, time-clock controller, piping, and the drip lines as shown in the diagrams (Figures 19.28 and 20.5). Use a submersible fountain pump or a sump pump operated by a controller. The volume (gpm) of the pump is calculated by the number of drip lines, which is a function of the number of plants. In our example hobby greenhouse, if we grew all of the plants in slabs or bato buckets the maximum number of vine crops the greenhouse could contain would be three beds with 12 plants each for a total of 36 plants. If each plant receives one drip line on an emitter of 0.5 gal per hour (gph), the total flow would be $36 \times 0.5 = 18$ gal per

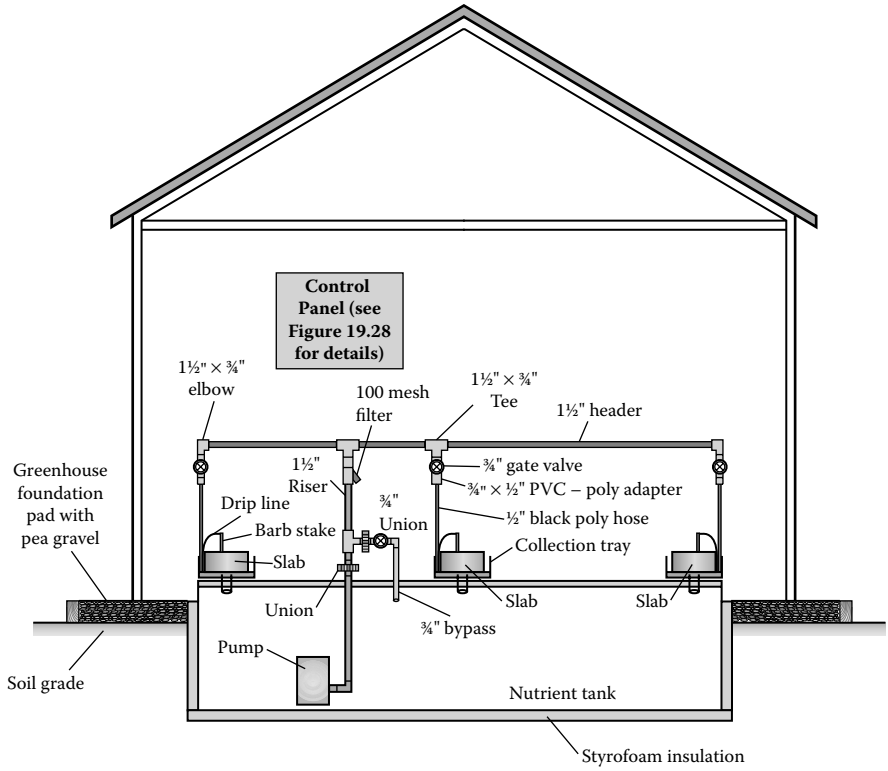

FIGURE 20.5 Cross section of nutrient tank at one end of greenhouse with components. (Drawing courtesy of George Barile, Accurate Art, Inc., Holbrook, New York.)

hour. Select a pump that has a flow capacity of twice that for lots of flexibility in crops, which would be about 40 gph. The next step in the pump selection is the lift it must satisfy. This is done by calculating the total frictional loss within the piping. These calculations are not presented as for such a small greenhouse a lift of 10–15 ft would be more than adequate. Finally, the pressure should be about 30 lbs per square inch (psi) to enable the operation of solenoid valves if you should wish to irrigate some of the rows with different cycles and periods of watering. This applies to the growing of numerous crops having different water demands. If this flexibility is preferred, a controller having 4–5 stations would have to replace the simple time-clock. I do not recommend this type of sophistication for a small backyard greenhouse.

To select the best value of pump with a low flow rate of 40 gph, the lift is inadequate due to its very small size. I prefer to select a larger pump and install a bypass line back to the solution reservoir to regulate the flow volume. There are small fountain pumps of 800 gph capacity with a lift of 12 ft for less than $50. These types of pumps would not produce sufficient pressure to operate solenoid valves. There are a number of "Little Giant" submersible pumps with a capacity of 70 gph up to 12 ft of lift with a pressure of 5 psi for about $100. They are 1/40 HP at 100 watts and draw 1.7 amps of electricity. Other models for about $150 have a

capacity of 200 gph at 14 ft with a pressure of 7.5 psi with a ½″ male outlet. They are 1/15 HP at 200 watts and 3.2 amps. For pressure compensating emitters of 2 liters per hour (0.5 gph), a pressure of 14.5 psi is optimal pressure for their operation. However, at 7.5 psi the volume of water delivered is a little less, about 1.75 liters/h or 0.46 gph, so this is an acceptable rate of flow. At lower pressure a larger emitter could be used. For example, a 4 liter/h emitter would give you 3.5 liter/h (0.9 gph) at 7.5 psi or about 3 liter/h (0.8 gph) at 5 psi. Alternatively, the length of any irrigation cycle can be increased when using a lower volume delivery of water by the emitters under lower pressure. In general, it is best to be oversized in the pump and use the bypass to cut back on the flow volume. The maximum pressure for the drip emitters is two bars or 29 psi. At that pressure they will deliver twice the volume that they are rated at as the rating is based upon 1 bar or 14.5 psi of pressure. There are also larger submersible pumps such as the Little Giant one-sixth HP utility pump capable of 840 gph at 15 ft of lift. It has a 1″ discharge. It draws 5 amps and uses 380 watts of power. It costs about $150. This size of pump would be a better choice over the smaller models.

Some suitable pedestal sump pumps are available. The advantage of the pedestal sump pump over the submersible types of pumps is that the pump motor is not in the presence of the nutrient solution. Many submersible pumps eventually start to leak and break down due to the corrosive action of the nutrient solution. All impellers of any of these pumps must be either plastic or of stainless steel to resist corrosion. A 1/3 HP pedestal sump pump will deliver up to 2100 gph at 15 ft or 900 gph at 20 ft of lift with 8.65 psi. The electrical demands are 330 watts at just under 3 amps and require a 15 amp circuit. They have a glass reinforced nylon impeller.

Pedestal sump pumps cost between $80 and $100. These types of pumps are available at a building supplier, plumbing store, or online.

The next step is the piping from the pump to a header to which the drip irrigation lines are connected. The connection to the pump depends upon the type of pump and its outflow diameter. The submersible pumps mentioned earlier have ½″ or 1″ outlets. The pedestal pump has a 1¼″ outlet. The ½″ outlet needs a female adapter connection while the others use a male adapter fitting. If using the larger submersible or pedestal pumps install a bypass (Figure 20.5) to regulate the volume flow of the pump as it exceeds that needed for the drip system. Use flexible black polyethylene piping from the pump to a header pipe attached to the back wall of the greenhouse about 30″ above the top cover of the solution reservoir as shown in the diagram. Install a ¾″ diameter bypass line from the pump riser with a union and a gate valve in this line as it returns to the nutrient reservoir. Keep the gate or ball valve near the upper end of the pipe so that it is easy to adjust. Then, with an elbow, make the return to the tank. Immediately before connecting the inlet from the pump to the header install a 100 mesh filter. The header pipe should be 1½″ diameter schedule 40 PVC. Attach the inlet from the pump with a PVC tee. Assuming there are three beds of plants assemble the header with two 1½″ elbows (one on each end) and one 1½″ tee for the middle bed. Install a ¾″ ball valve downstream from the tee or elbows within 2″ of the fittings. The ball valves will allow the balance of flow to the drip lines. After the ball valves convert the piping to black poly from PVC using a slip thread reduced bushing converting from ¾″ to ½″ to adapt to the ½″ black poly drip hose.

Place the drip lateral line hose on top of the bato buckets or at the sides of the slabs. Use a 3″, 1″ diameter piece of PVC pipe to plug the end of the poly hose by bending about 6″ of it back and slipping the PVC piece of pipe over it as a sleeve. Alternatively, you may purchase a Figure "8" end stopper. Make up 18″ long drip lines from 0.160″ to 0.220″ diameter drip line. Punch the holes for the emitters in the poly hose using a special punch tool available from irrigation stores or online. The position of the holes can be on the top of the black poly hose for easy access. Locate them where the plants will be set. Insert the emitters and attach a drip line to each. Insert the other end of the drip line into a barbed stake that will keep the water from spraying on the plants. One stake will be placed on top of the rockwool block in which the transplant is growing.

If plant towers are located in one of the rows bring the ½″ black poly hose from the header up to the top of the plant towers and thread it through a 1″ tee at the top of each plant tower. The tee is fixed to the outer sleeve support of the plant tower as shown earlier in Chapter 13 (Figures 13.26 and 13.27). From the black poly hose insert three compensating pressure emitters of 4–8 liters/h (1–1.5 gph) above each plant tower. Make two drip lines long enough with sufficient slack to enter the top pot of the plant tower and the other one to reach the center pot of the plant tower. Insert a barbed stake at the end of each drip line to secure it into the substrate of the pot.

The plant towers are set up exactly as explained in Chapter 13 with the exception of the supporting frame dimensions. The plant towers in the greenhouse could drain to waste or the solution could be re-cycled by raising them up on a frame to an elevation above the nutrient tank (about 6″). The collection pot would conduct the solution to a return pipe going back to the nutrient cistern. In this case, construct the supporting frame to a height of 6″ or slightly higher to enable the spent solution to return to the cistern.

There are many systems to choose from, so select the ones that best suit the growing requirements of your plants. You can easily assemble a number of different hydroponic systems within a backyard greenhouse. Construct all of these systems yourself from components readily available from hydroponic shops and irrigation suppliers. Websites such as that of Grainger, Inc. offer their online catalog that contains heaters, fans, pumps, time-clocks, controllers, and many other components (see Appendix). Enjoy the fun of building your own systems and experimenting with different ones to determine which crops and systems work best together!

21 Sources of Supplies and Components for Backyard Greenhouses

Often supplies and components for backyard greenhouses may be sourced from local building suppliers, distributors for plumbing, electrical, and heating components. For specific greenhouse-related supplies and components contact greenhouse builders and distributors as well as hydroponic outlets. There are specialized manufacturers and distributors of hobby, backyard greenhouses, their components, and supplies. If you are in the market for a backyard greenhouse visit personally some of these companies as they will be able to assist in your decision as to the size, nature, and type of greenhouse most suitable for your needs. They can also recommend the components of heating, cooling, lighting, and so on to provide optimum growing conditions in a specific location. They can calculate the heating and cooling capacities for your area and recommend the size and type of these units to purchase. Consider capital and operational costs of various options of these components. The optimum levels of environmental factors are also a function of the crops grown. Normally, the capacities of the components are based on the extreme levels of the weather conditions. Under such extremes, the conditions within the greenhouse can be maintained at less than optimal, but adequate to prevent any damage to the plants. Extremes generally occur over relatively short periods during the early hours of the morning so will not have long-term effects on the health of the plants.

TEMPERATURE

Control of optimum temperatures is based upon heating and cooling. These two factors are regulated by heaters, ventilation fans, evaporative coolers, and shading (Figure 21.1). These components are available from many suppliers of backyard greenhouses (see Appendix).

Heating

Smaller greenhouses up to 20 ft in length by 10–12 ft in width may be heated with space heaters. Longer greenhouses should use unit heaters with a convection tube that distributes the heated air rapidly down the length of the greenhouse. The unit heater has a fan at the back that blows the air over heat exchangers into the convection tube. This type of heating system is mounted in the peak area of the greenhouse and circulates heat above the plants. It is not as efficient as using hot water from a boiler through heating pipes at

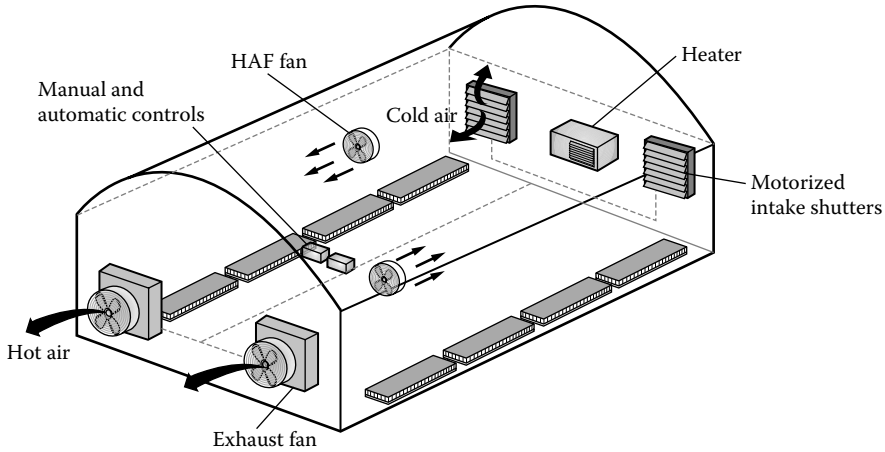

FIGURE 21.1 Temperature control in a greenhouse. (Drawing courtesy of George Barile, Accurate Art, Inc., Holbrook, New York.)

the base of the plants. But, such a hot-water heating system is very costly although much more efficient in providing more uniform heat throughout the crop and is less expensive to operate. A mixing fan or horizontal air flow (HAF) fan mounted just above the crop assists in mixing the air within the greenhouse. The heating systems discussed here are space heaters as most backyard greenhouses are of 10 ft × 12 ft or 10 ft × 16 ft and such a heating system is efficient and economical for the greenhouse size.

In Chapter 19, heating calculations and some websites that provide such information were presented. Projected costs of heating were also given. Emphasis here is on the types of heaters and their advantages or disadvantages along with cost ranges for the various types and models (Figure 21.2). Space heaters may be electrical or fired by propane or natural gas. Natural gas from your house would provide the most economical operational source of heat, but, the cost of installation is more expensive than to use propane or electrical sources. An underground cable must connect the greenhouse with the residence, so size it sufficiently to meet the demands of the space heater (usually 220 volts, 30 amps). A 220-volt heater is more efficient than a 110-volt one and at the same time has more heating capacity. Most of these heaters come with a two-speed fan. The 220-volt heaters, compared to 110-volt ones, have a stronger fan that can better mix the air in the greenhouse.

An alternative is to locate electric baseboard heaters along the sides of the greenhouse. The air will rise up and circulate as it cools. The disadvantage with this type of heat is that it is located very close to the outer rows of plants and could cause burning of leaves of those plants. The heat is focused in one area of the crop and can also reduce relative humidity to low levels near the site of the heaters. If baseboard heaters are installed, a HAF fan should be mounted near the top of the crop above one of the aisles or the center row to mix the air to create convection currents.

Infrared heaters of relatively small sizes are available for application in backyard greenhouses. The advantages of infrared heaters are lower electrical consumption, no noise from a fan, and they heat the plants and you, not the air. There are a number

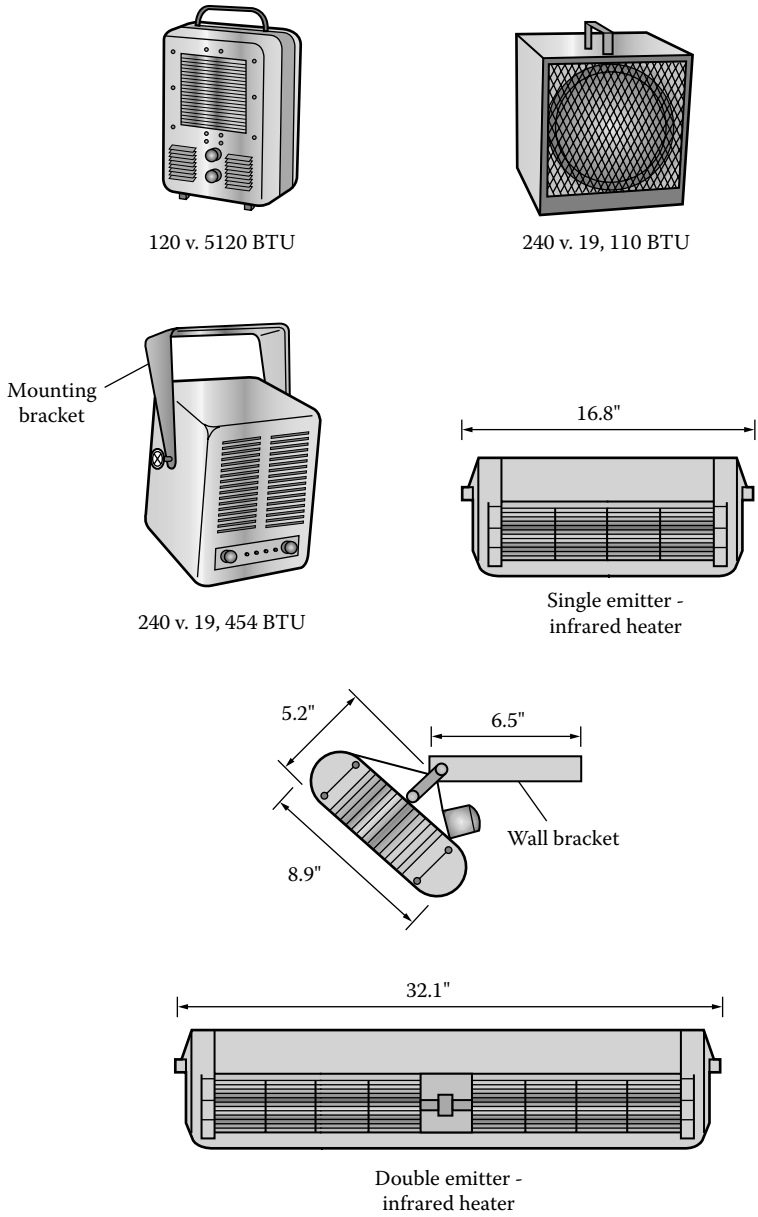

FIGURE 21.2 Various heaters for backyard greenhouses. (Drawing courtesy of George Barile, Accurate Art, Inc., Holbrook, New York.)

of types, but all are mounted above the crop to maximize coverage. Some are natural gas or propane operated while others are electrical.

Modine manufactures several natural gas or propane small models of 30,000 and 50,000 BTUH, respectively. In our greenhouse example of 10 ft × 12 ft (see

Chapter 19), for weather conditions of Seattle, WA, the heating system capacity was 9700 BTUH. The Modine heaters would be too large for this size of greenhouse. Other types of infrared heaters are available as a modular design with single, double, or triple emitters (heater units) in one unit. These are electric and a selection of wattage, voltage, and amperage per unit gives versatility in satisfying numerous heating demands. The smallest one emitter is 1.5 KW and 12.5 amps going up to three emitters at 6 KW and 25 amps (240 volt). They are wall-mounted with special brackets or supported overhead with chains. These heaters may be mounted singly or in banks up to 3 units. The smallest unit (one emitter) mounted at 8 ft will cover a surface area of 10 ft × 10 ft × 12 ft to supply heat over 110 sq ft of surface. The two emitter model, mounted at 10 ft, covers 160 sq ft of surface heat zone. Prices range from $400 for a single emitter to $600 for 4 KW, 19 amp triple-emitter heaters. They are considerably higher in price than standard electric space heaters, but over time the savings in heating costs would compensate for the higher initial capital cost.

The smallest 120-volt electric portable greenhouse heater capable of generating 5120 BTU can heat up to 120 sq ft of greenhouse. It comes with a thermal cut-out to prevent overheating. However, a single-stage thermostat could be wired in line to operate the heater. This size of heater is too small for a 10 ft × 12 ft greenhouse. I have found it is good for an 8 ft × 12 ft free-standing or lean-to greenhouse. This type of heater is available for just under $50. A larger 240-volt, industrial electric heater produces up to 19,000 BTU. It is 5600 watts, 23 amps with a built-in thermostat, and thermal safety limit switch to prevent overheating. This size of heater easily fulfils the heating needs of our 10 ft × 12 ft greenhouse example and would be adequate for a 10 ft × 16 ft greenhouse. It costs about $150.

Natural gas or propane greenhouse heaters will generate from 20,000 to 25,000 BTU. These are suitable for larger backyard greenhouses of at least 10 ft wide by 20 ft long. However, they are also recommended for greenhouses of 150–175 sq ft of floor area in more northerly locations. They are available as vented or nonvented models. If using a nonvented heater the source of natural gas or propane must be clean burning not to create any carbon monoxide or other byproducts that could damage the plants. For this reason, it is safer to use a vented model. All gas-burning models must have a fresh air intake to provide oxygen for complete combustion. A 2–3″ PVC intake pipe mounted within 1 ft of the floor at one side of the heater is recommended. Place an elbow oriented downward on the outside with a screen cover to prevent water and rodents from entering the greenhouse. Prices, based on size, vary from $450 to $600.

Ventilation

The next step in temperature control is ventilation to assist in cooling the greenhouse. Ventilation is achieved through the use of exhaust fans and circulation fans. The size of ventilation fan is determined by the volume of air in the greenhouse to be exchanged once per minute, which is expressed as cubic ft/min (CFM). CFM is expressed as: CFM = Length × Width × 12. Our example greenhouse has a needed air volume exchange of: 12 × 10 × 12 = 1440 CFM. Select an exhaust fan based upon that air exchange rate. Ventilation packages are available that include a shuttered

exhaust fan, air intake shutters, and a thermostat. A 16″ shutter fan, two 18″ intake shutters and a thermostat costing about $460, has a 2000 CFM rating. It is best to install a variable speed fan that operates from a two-stage thermostat or a variable speed controller that initiates different speeds of the fan. The advantage to this type of fan is to enable minimum cooling during sunny days with ambient temperatures below optimum for the greenhouse crops. Due to the "greenhouse effect," the greenhouse air temperature heats up fast under sunny conditions regardless of the outside temperature. The exhaust fan starts at a lower speed to exchange the air slowly, but keeping it within optimum levels. If the temperature in the greenhouse continues to rise above optimum, a faster fan speed will be initiated. This prevents a rapid influx of cold air into the greenhouse. The slowly incoming air will mix with the inside air keeping it optimum around the plant canopy.

Locate the exhaust fan on the north end of the greenhouse above the nutrient tank at about 7 ft from the ground. Installation instructions are given in Figure 21.3. Mount the fan frame on horizontal support bars bolted to the vertical framework of the greenhouse. The motor on the fan is on the inside of the greenhouse with the shutters outside. Caulk the perimeter of the shutter to the greenhouse glazing. The two intake shutters are situated on the opposite end, one on each side of the door, about 18″ above ground level. These intake shutters may operate with the pressure difference created during the exhaust fan activation as shown in Figure 19.23 or they may be regulated by a small motor that is coordinated with the operation of the exhaust fan.

Thermostat and speed control units should be mounted at plant height near the center of the greenhouse so as not to be influenced by drafts directly in line with the exhaust fan or heater. Protect them from direct sunlight by mounting them to a

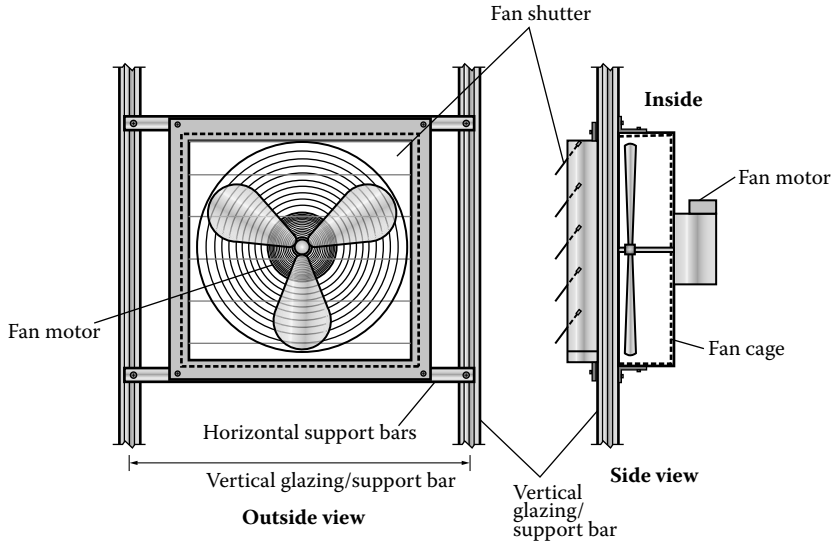

FIGURE 21.3 Installation of exhaust fan in greenhouse end wall framing. (Drawing courtesy of George Barile, Accurate Art, Inc., Holbrook, New York.)

piece of plywood painted white. Put a small top above them to shade them from the sun as shown in Figure 21.4.

Support one small circulation fan (10″ diameter) above each aisle between the crop rows. Locate one next to the door facing the opposite direction and the other at the exhaust fan end in front of the nutrient tank (Figure 21.5). These fans will circulate and mix the air to make the temperature more uniform throughout the greenhouse. They cost less than $100.

As mentioned in Chapter 19, many backyard greenhouses have solar operated roof vents. This is a less expensive method of ventilation than forced air that depends

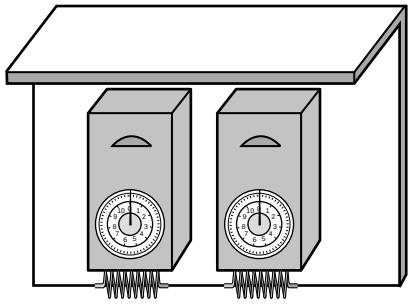

FIGURE 21.4 Thermostats with top cover. (Drawing courtesy of George Barile, Accurate Art, Inc., Holbrook, New York.)

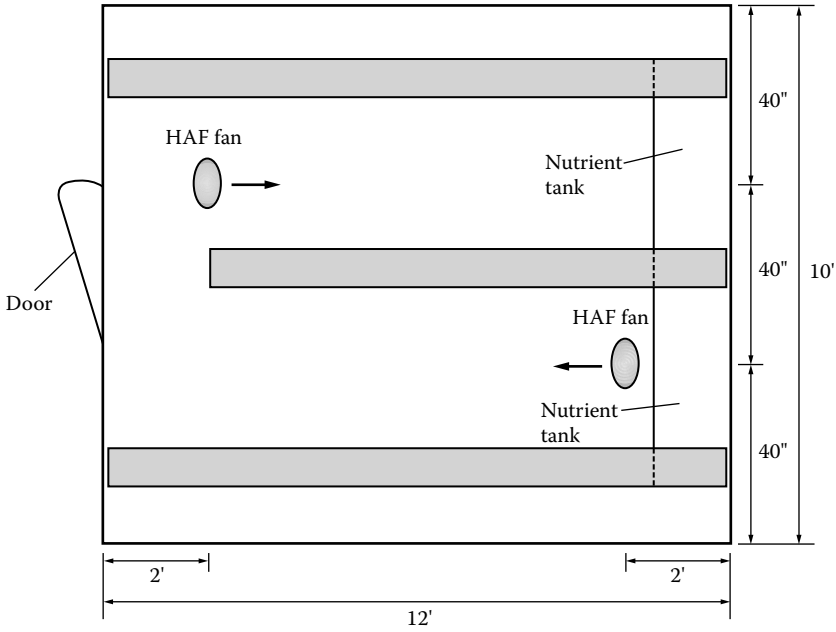

FIGURE 21.5 Location of horizontal air flow (HAF) fans. (Drawing courtesy of George Barile, Accurate Art, Inc., Holbrook, New York.)

entirely upon convection air currents within the greenhouse. Under high summer sunlight and temperatures, natural ventilation may be inadequate. Under such conditions, cooling can be assisted greatly by the use of an evaporative cooler or the use of an evaporative cooling pad on the end of the greenhouse opposite the exhaust fan.

Cooling

There are two methods of cooling: evaporative cooling and fogging systems. With an evaporative cooling pad two exhaust fans are part of the system. Locate the evaporative cooling pad on the north end above the nutrient tank and two exhaust fans on the opposite, entrance end of the greenhouse. If the greenhouse has natural solar vents, they must be closed (disabled) during a cooling cycle to prevent short-circuiting of the air entering directly from the roof vents and bypassing the cooling pads.

The size of the cooling pads is a function of the total CFM of air to be exchanged. In our 10 ft × 12 ft greenhouse, we needed 1440 CFM. For 4″ thick cooling pads use 1 sq ft of pad per 250 CFM. That would be: 1440/250 = 6 sq ft. The smallest self-contained cooling pad systems come 3 ft wide by 5 ft long and are capable of cooling about 4000 cubic ft. So, such a unit would be more than adequate for our 120 sq ft greenhouse.

However, smaller units can be made upon request from suppliers. The reservoir, collection pipe and inflow pipe of a self-contained unit are constructed of polyvinyl chloride (PVC). This eliminates the need for a separate external sump tank as it along with all the piping (outflow distribution pipe over the top of the pad and the bottom return pipe) connect to a small PVC reservoir that has a submersible pump as shown in Figure 21.6. This could be constructed as a do-it-yourself (DIY) project by simply purchasing some 4″ thick cooling pads of 2-ft or 3-ft tall and make it 4–5 ft long. The cooling pad panels are 12″ wide by 2–8 ft tall in 1-ft increments. It would be best to use either 2 ft or 3 ft tall sizes. Locate the cooling pad in the middle of the north end of the greenhouse or that end above the nutrient tank. Place it to one side of the control panel 3–4 ft above the floor. A ready-made cooling pad system of 3 ft × 5 ft costs about $800.

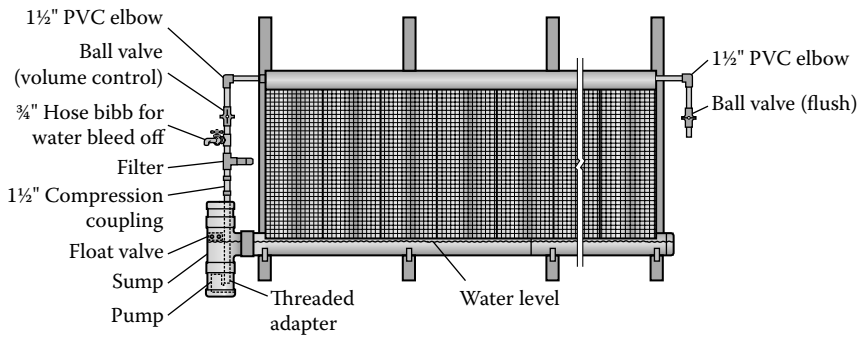

FIGURE 21.6 Small pre-assembled cooling pad for backyard greenhouse. (Drawing courtesy of George Barile, Accurate Art, Inc., Holbrook, New York.)

It is best to choose two exhaust fans that have a larger capacity than the 1440 CFM as the static pressure though the cooling pad reduces the air flow slightly. Therefore, the total rate of air exchange of the two exhaust fans should be about 2500 CFM.

An alternative to using a cooling pad system is to use an evaporative cooler (Figure 21.7). This is the preferable method for small greenhouses. They come in numerous sizes ranging from 1000 to 6500 CFM with prices ranging from $400 to $1300. Two types available include through wall and ducted models. The coolers are situated outside the greenhouse at the north or tank end wall. It is best to support the cooler on a concrete pad to keep it free of dirt and debris. Provide access through the greenhouse covering to fit the discharge of the cooler. This cooler is self-contained with a blower that moves outside air across cooling pads inside the unit and pushes cold air into the greenhouse. As a positive pressure system, it forces the hot air in the greenhouse out roof vents or exhaust shutters as shown in Chapter 19 (Figures 19.25 and 19.26). The system is operated by a two-stage thermostat that runs the cooler with or without wetting the pads. The first stage is a dry pad and as the temperature reaches a second limit, the pad is moistened to further reduce the temperature. The coolers come with a water hose connection for constant water supply. Be sure to match the CFM ratings of the cooler with the total of the exhaust shutters or roof vents. Be careful to winterize the evaporative cooler by draining all water from the system before any threat of frost.

A very simple method for additional cooling is to attach a mist ring on the outside protector cage of circulation fans within the greenhouse (Figures 21.8 and 21.9). These mist rings emit a fine mist (1/2 gph per nozzle) that is dispersed throughout the greenhouse by the fan cooling the air while also adding humidity. Attach the mist ring to a standard water hose. They are available in three sizes depending upon the fan size, using 3, 4, and 5 nozzles per ring. The ring is easily attached to the fan cage by use of plastic zip ties. Connect a water filter on the garden hose or hose bibb in line with the mist ring to prevent clogging of the mist nozzles with debris. The mist rings range in price from $25 to $30 for the different sizes.

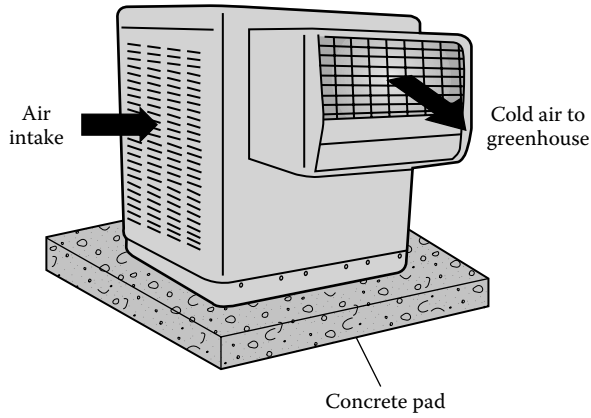

FIGURE 21.7 Evaporative cooler mounted outside of greenhouse. (Drawing courtesy of George Barile, Accurate Art, Inc., Holbrook, New York.)

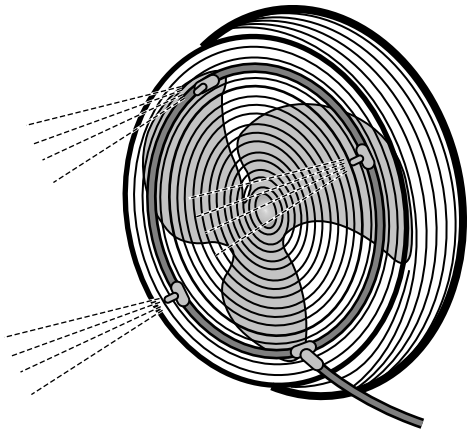

FIGURE 21.8 Evaporative cooling by mist ring on a circulation fan. (Drawing courtesy of George Barile, Accurate Art, Inc., Holbrook, New York.)

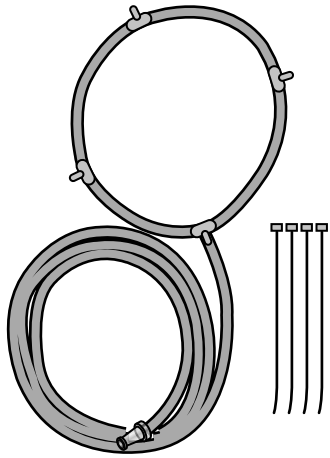

FIGURE 21.9 Mist ring for a circulation fan. (Courtesy of CuisinArt Golf Resort and Spa, Anguilla.)

Fogging is an efficient cooling method, but unfortunately most systems are expensive and more applicable to large greenhouses. Such systems operate at a water pressure of 1000 psi in order to produce droplets of 5–45 microns. At that size, the water particles remain suspended in the air as a fog, not a mist. The evaporation into the air of the water lowers the air temperature. To generate such fine water droplets a high pressure pump, flexible tubes, filter, and nozzles make up the components of the system. Even the smallest portable units are for an air volume of 5000 cubic ft, about four times that needed for our 10 ft × 12 ft example backyard greenhouse. The fogging nozzles are attached to the cage of a very high velocity fan that would damage the crop in a small greenhouse. Other small portable humidifiers are those used in homes to increase the relative humidity in the air. These can be used in a backyard

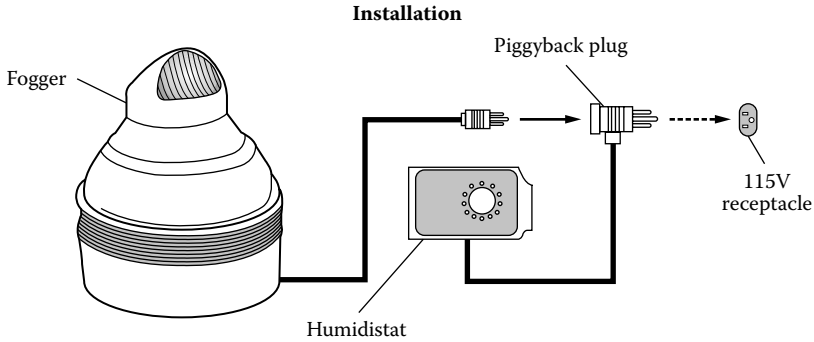

FIGURE 21.10 "Hydrofogger" humidifier for cooling a backyard greenhouse. (Courtesy of Hydrofogger.com, P.O. Box 31281, Greenville, SC 29608.)

greenhouse. They are operated by a humidistat located 5–6 ft above the floor. The humidistat is connected in series with the fogger. It will control the fogger within a 20%–80% humidity range. A typical humidifier of this type is the "Hydrofogger" at www.hydrofogger.com (Figure 21.10). This unit is recommended for small greenhouses and indoor gardening with air volumes of up to 4500 cubic ft. They also have a smaller "Minifogger," which covers up to approximately 1080 cubic ft and a "Cuoghi Mini NEB" that covers up to 1980 cubic ft. Prices range from $300 to over $600.

Shading

Partial shading, up to 40%, is recommended during the longest, hottest days from late spring to early fall. The shade cloth can be placed on top of the greenhouse roof. The shade will assist in reducing some of the heat entering the greenhouse and therefore save on the evaporative cooling. Avoid resting the shade cloth directly on the greenhouse covering, especially if the glazing is glass or polycarbonate. Place a few bars across the roof to keep the shade several inches above. This will permit some ventilation between the shade and the glazing and will avoid any possible adhering of the shade cloth to the glazing under high temperatures. If you do not want to cover the greenhouse with shade cloth, use whitewash paint over the hottest months. It can be washed off easily in mid-fall so as not to limit light as the days shorten. An excellent product is "ReduSol" by Mardenkro (www.mardenkro.com).

LIGHTING

Supplementary artificial lighting is essential to increase yields and shorten cropping cycles during the short day lengths and low light levels of late fall through winter to early spring months. Plant growing lights include cool white, high-output fluorescent, high intensity discharge (HID), light emitting diode (LED), and compact fluorescent lights as shown in Figures 21.11 through 21.14. The choice of light is a function of light demand of the specific crops, capital cost, operational cost, and the area served by a given unit.

FIGURE 21.11 High intensity discharge (HID) light and fixture. (Courtesy of Sunlight Supply, Inc., Vancouver, Washington.)

FIGURE 21.12 T5 fluorescent lights. (Courtesy of Hydrofarm Horticultural Products, Petaluma, California.)

There are two types of high intensity discharge (HID) lights: high-pressure sodium (HPS) and metal halide (MH). The HPS lights provide more energy in the red part of the spectrum, which promotes flowering and fruiting, while the MH lights are more intense in the blue causing rapid growth. HPS lights are better to

FIGURE 21.13 Light emitting diode light. (Courtesy of LumiGrow, Novato, California.)

FIGURE 21.14 Compact fluorescent light and bulb. (Courtesy of Sunlight Supply, Inc., Vancouver, Washington.)

supplement sunlight to extend the day length or to increase intensity during cloudy periods whereas MH light is more useful for indoors without natural sunlight. These lights give off considerable heat so must be mounted about 3 ft above the crop. With the relatively low eave height of backyard greenhouses, it is not possible to mount these lights above the crop. The alternative is to mount one unit near the peak of the roof in the middle of the greenhouse. This position of the light unit reduces the efficiency of the light distribution as the plants directly below will receive more light than the rows next to the sides of the greenhouse. Another disadvantage is that the lights are expensive to purchase and operate.

For small backyard greenhouses fluorescent lights are more efficient. The new T5 lights put out more intensity than older fluorescent lights. They have the advantage of offering higher light efficiency with low heat and provide a full spectrum in the red and blue for plant growth, flowering, and fruiting. They are available as a high output tube that provides about twice the intensity of light than the standard T5 tube. They are available as single tubes or multiple tubes, up to 8, in a 4-ft reflector unit (Figure 21.12). A single unit fixture and bulb costs about $50. Although they do not have the intensity of HID lights, they can be placed within 6–18″ of the plant due to cooler output and therefore can give similar intensity at plant leaf surface. These

fluorescent lights are lighter in weight and have lower profile. Their ballasts may be remotely located to further reduce any heat generated directly above the plants.

LED lights are very light in weight, generate very little heat, and have very long life. They maximize red and blue light so are well balanced for the vegetative and flowering growth of plants. However, to get sufficient intensity and uniform distribution of the light it is necessary to purchase LED arrays where many LED lights of white, red, and blue combinations fit within a reflector unit (Figure 21.13) that will produce an equivalent of a 1000 watt HID lamp. Prices of these arrays are high from $1000 to $1200 each.

How much lighting is needed? Most vegetable crops need 50–70 watts of light per square foot of growing area if the artificial light is the only source of light. In a backyard greenhouse that has natural light also available, the level of supplementary lighting can be reduced to one-quarter of that. Calculate the correct wattage of light needed for a specific area by multiplying the desired wattage of the light by the area in square feet. In our greenhouse example of 10 ft × 12 ft the total area is 120 sq ft. So, we need at least 50 watts × 120 sq ft × 25% = 1500 watts. One 1000-watt HID light mounted near the peak of the greenhouse would provide this amount of light as would an LED light array. My preference for a backyard greenhouse is to use three 8-ft, dual tube, high-output fluorescent units, one above each row of plants. With the 4-ft T5 high output four tube fixtures use a total of 6 units. The cost for those would be about $800.

Support the fluorescent lights about 18″ above the tops of the plants using jack chains that will allow their adjustment as the crop grows.

Compact fluorescent lights with fixtures (Figure 21.14) (one bulb per fixture of 125 watt) will cover a maximum of 3 ft × 3 ft of growing area. For our greenhouse example we would need 4 units per row or a total of 12 units. These cost about $70 a unit, so while the lights last about 10,000 h the number of units needed is not practical compared to other light sources as the cost for 12 units is over $800.

With a single unit of HID or LED array, it is advantageous to use a light mover that moves the light back and forth on a track above the crop to give better light distribution over time (Figures 16.5 and 16.6). This gives better light penetration throughout the crop than just those plants immediately below the light unit. Supplementary light is also for extending the day length during the winter months.

Keep day length at 12–14 hours, as plants need a period of darkness. In addition, you do not want to upset any neighbors by lighting the greenhouse beyond normal summer months of daylight. Operate the lights with a time-clock, starting them about 8:00 AM and turning them off by 10:00 PM. That will give 14 h of supplementary light. On days with sunlight, turn off the lights by 9:00 AM and activate them again about 3:30 PM in the afternoon as the sun intensity falls. It is also possible to get a photo sensor that could regulate the operation of the lights.

CONTROLLER/TIME-CLOCK FOR IRRIGATION

While the exhaust fan, roof vents, and heaters can be controlled with thermostats, the irrigation cycles are operated by a time-clock or controller. Irrigation controllers offer more functions than a simple time-clock, but are relatively expensive. Time-clocks

should be of 24-h periods with intervals capable of separate hours and minutes. There are electronic 7-day programmable timers having 1 min on/off cycles with up to eight cycles per day for about $25 (Figure 21.15). This programmable timer is ideal for activating irrigation cycles. For about $15 you can purchase a mechanical timer that has 15 min on/off cycles with a 24-h time period (Figure 21.16). This type of timer is fine for turning lights off and on, but is not suitable for irrigation cycles. A time-clock will operate as only one station, so it does not have the capability to operate different irrigation cycles and periods for different rows of crops. To achieve this use an irrigation controller having at least three to four stations. To operate independently several stations solenoid valves are installed within each irrigation line to the plants. These would be located near the header pipe after the ball or gate valve,

FIGURE 21.15 Electronic programmable time-clock. (Courtesy of Hydrofarm Horticultural Products, Petaluma, California.)

FIGURE 21.16 24-h, 15-min increment mechanical timer. (Courtesy of Hydrofarm Horticultural Products, Petaluma, California.)

but before the conversion to the black poly hose having the drip lines. These solenoid valves would be for ¾″ diameter pipe as that is the pipe size from the header.

Many irrigation equipment suppliers, such as Hunter Industries, Rain Bird, and Toro have controllers for home landscapes (See Appendix). The least expensive controllers (under $300), which have four stations, have only four starts per station during a day. That is not enough for irrigating during hot days when you may need at least 8–10 starts.

There are also timer switches (time-clocks) at lower prices from $25 to over $250 that turn one output on or off over a period of 7 days and can be adjusted to within 1 min intervals. The electronic versions are the expensive ones. Electromechanically operated timers are at the low price range. Intermatic (www.intermatic.com), Tork, and Paragon make both mechanical and electronic timers that vary in price from $100 to over $350. They are available through Grainger, Inc. (www.grainger.com) as are many other components as fans, heaters, vents, and so on. The lowest price time-clocks are 7-day clocks that can activate a circuit for a minimum of 15 min.

Using a 2-pole relay, these timers can activate one 110–120 volt circuit (pump) and a 24-volt circuit (solenoid) at the same time using a step down transformer in parallel with the solenoid, but they act as only one station. This restricts their ability to operate the pump and two solenoids at different times as that would require a two-station controller or two independent time-clocks. Each electronic time-clock costs about $175. The low-priced timers are used to turn lights on and off, such as those used in households that are available for $25 or less.

After examining many of these controllers and timers, I believe that a low-priced timer is fine for operating the lights but cannot be used for irrigation. Overall, the best procedure is to operate all of the plant rows at the same time on one time-clock that activates the pump only. When growing all vine crops with drip irrigation on a small scale, there is no significant benefit of increased yields by using different irrigation cycles for different plant rows. Grow low-profile plants such as herbs, lettuce, and basil in a separate nutrient film technique (NFT) or raft culture system that is operated independently of the vine crops. If you wish to grow these crops in plant towers with a drip irrigation system, keep them on the same cycles as the vine crops operated by the same pump. The 7-day programmable timer for about $25 is suitable for these needs.

While some of these components seem to be complicated in their specifications for your specific needs, salespersons in companies distributing the products can assist greatly in simplifying your choices to suit your greenhouse needs. These are all on-the-shelf products available at many distributors in stores or online.

Section VI

Vegetable Crops and Their Cultural Techniques

22 Most Suitable Crops and Varieties

While we can grow literally all crops hydroponically, our choice largely depends upon economics. Under research conditions, many crops are raised using hydroponic culture, but the purpose of the research is to determine other physiological, pathological, nutritional, and/or pest effects on the plants under controlled atmospheres. The emphasis is not on hydroponic techniques, but only to use it as a tool in the research undertaken in other plant aspects. For such work, the economics of hydroponics is not at question for a particular crop. Crops such as cereals, rice, corn, beans, other legumes, root crops (carrots, potatoes, etc.), and many flowers and ornamentals have all been grown hydroponically during research studies.

In our case of growing on a small scale either indoors or in a backyard greenhouse, the choice of crop is not fully dependent upon economics, so noncommercial greenhouse crops may be cultured. For example, if you are very fond of some crops that you do not like the quality in supermarket products, grow them yourself hydroponically. Such crops as Asian greens, beans, beets, bok choy (Pac Choi), broccoli, Brussels sprouts, cabbage, carrots, cauliflower, celery, Chinese cabbage, kale, Kohlrabi, leeks, melons, okra, onions, onion sets, peas, radish, spinach, squash, Swiss chard, and zucchini will thrive in hydroponics. However, the choice of substrate is important. For instance, any root crops such as beets, carrots, onions, and radish will need a peatlite or sand substrate as that type of substrate permits the radical or bulb to form uniformly. Do not be afraid to experiment with various substrates and nonconventional crops. After all, part of the exercise is for it to be an enjoyable hobby. In this chapter, most of these nonconventional hydroponic crops are not discussed. Simply select such crops from a reputable seed company catalog. For backyard greenhouses seek varieties that will withstand high temperatures during summer months and others that do well under lower temperatures during winter months. Indoors most varieties will be suitable.

ARUGULA

There are two types of arugula: the roquette (rocket) and wild forms. The roquette is the standard salad arugula. The wild forms tend to be more pungent in flavor. “Astro” is a heat-tolerant variety of roquette form. “Sylvetta” also known as “wild rocket” is slower growing with a more pungent flavor. All grow well in all types of hydroponic culture.

BOK CHOY

This Chinese cabbage is also known as Pak Choi, Pac Choi, and Bok Choi. Most are green, but a few have purple leaves and red/green stems. Some varieties are tall, while others are more compact. My preference for growing hydroponically is the dwarf varieties as they will not lodge (fall over) or require large spacing and do well in plant towers (Figure 22.1), nutrient film technique (NFT), and raft culture systems. The smaller varieties can be spaced similar to lettuce (four plants/sq ft). Some of the best varieties we have found to do well under hot conditions include: Green Fortune, Red Choi, and Takuchoy (Takuchoi). These are all dwarf in form. Other low-profile varieties (4–6″ tall) include the following: "F1 Hybrid Dwarf Bok Choy" that tolerates high heat and cold can be harvested within 45 days from sowing; "Dwarf Bok Choy" matures in 40 days; "Extra Dwarf Bok

FIGURE 22.1 Bok choy in plant towers. (Courtesy of CuisinArt Golf Resort and Spa, Anguilla.)

Choy" is only about 2″ tall and is ready in 30 days; and "Huo Guo Chai" is good for stir fry and soups. These varieties are available from Tainong Seeds, Inc. (www.tainongseeds.com).

LETTUCE

Iceberg lettuce should not be grown for several reasons. Firstly, it has very low nutritional value compared to bibb or leafy lettuces. Secondly, it does not form a tight head under high temperatures that normally would be encountered in a backyard greenhouse. There are many choices of varieties of leaf lettuce, oakleaf, Lollo Rossa, butterhead (Bibb), and Romaine/Cos. Leafy varieties include the green varieties "Black Seeded Simpson," "Domineer," "Malice," "Frizella," "Waldmann's Dark Green" and red varieties "Red Sails," and "New Red Fire." Red oakleaf lettuces are "Navarra," "Oscarde," "Red Salad Bowl," "Ferrari," and "Aruba." Some green oakleaf lettuces available are "Cocarde," "Tango," and "Green Salad Bowl." Lollo Rossa types comprise of "Dark Red Lollo Rossa," "Locarno," "Revolution," and "Soltero" to mention a few. Butterhead or bibb lettuces that I have grown with NFT and raft cultures include "Buttercrunch," "Charles," "Cortina," "Deci-Minor," "Milou," "Ostinata," "Rex," "Salina," and "Vegas." I have found that "Rex" is one of the best varieties for the raft and NFT systems under high temperatures as it bolts (goes to seed) slowly. Romaine or Cos varieties need cooler temperatures, and should hence be planted during the cooler seasons, otherwise they may bolt quickly under high temperatures. You may plant them under most temperatures if you do not require a crisp head formation. They will be more like a leafy lettuce under higher temperatures. Varieties include "Green Forest," "Parris Island," "Outredgeous" (red), and "Rouge D'Hiver" (red). Several fine leaf lettuces that are becoming popular are "Multi Red 1, 2, 3" and "Multi Green 1, 2, and 3."

There are numerous others to choose from presented in seed catalogs. The preceding are varieties that I have had success with growing hydroponically.

LETTUCE SALAD MIXES

These premixed blends of color and texture of lettuces are for mesclun mixes. The varieties in each mix are selected to have similar growth rates to allow uniform size at harvest. You may also create your own lettuce salad mixes. Simply, purchase the varieties you wish and mix them in a container before sowing them. You may mix different ratios of these varieties. For example, if emphasis is on red varieties use a larger portion of the seeds as red varieties.

Johnny's Selected Seeds (www.johnnyseeds.com) offers a number of pre-mixed lettuce blends. Their "Encore Lettuce Mix" has Green Oakleaf, Red Oakleaf, Green Romaine, Red Romaine, Lollo Rossa, Redleaf, and Bibb lettuces. The "Allstar Gourmet Lettuce Mix" combines Green Oakleaf, Red Oakleaf, Green Romaine, Red Romaine, Lollo Rossa, and Redleaf lettuces in a balance of color and texture proportions. The "Five Star Greenhouse Lettuce Mix" is a blend of downy mildew-resistant varieties for indoor culture. The "Wildfire Lettuce Mix" was created for high color contrast of the red varieties paired with green varieties.

These should be seeded in beds using a peatlite substrate. Shake the package before sowing to mix the seeds evenly. Sprinkle about 60 seeds per foot in a 2–4″ wide band. Cover lightly with about ⅛″ of peatlite or vermiculite medium. Keep the bed moistened with raw water until germination occurs and the seedlings reach about 1″ high. Thereafter, water every day with a half-strength nutrient solution using a watering can. Within 3 weeks, harvest by clipping the tops with a scissors. Do not cut lower than 1″ from the plant base to allow re-growth. Several, up to three, harvests may be made if cared for properly.

BASIL

There are many varieties of basils; the choice depends upon what you wish to use it for and what kind of flavor you want. The most common is the classic Italian sweet basil (Genovese). This variety is tall (24–30″) with large leaves up to 3″ long. It takes about 68 days to maturity, but may be harvested after 3 weeks from sowing. The seeds germinate in 5–10 days.

Basils need to be cut often, usually every few weeks, to keep the plants from flowering and going woody. The first cut should be made above the second node leaving at least two sets of side shoots below (Figures 22.2 and 22.3). That will train the plant to branch often so that it becomes very bushy. The next cut should be these side shoots again as they reach the second node. Harvest above the second node permitting four more side shoots to form. This constant pruning at this stage of side shoot development will keep the plants vegetative and reduce flowering. When flowers form immediately, pinch them to prevent the plant from getting generative and becoming woody. Eventually, after about 3 months, it is best to replace the plants. Start seedlings in a peatlite substrate or in Oasis or rockwool cubes depending upon the hydroponic system you are using. If in raft culture or NFT, it is best to use 1″ rockwool cubes. If in a bed of peatlite mix sow the basil in a peatlite mix in 72-celled compact trays. Sow seeds 3 weeks prior to the transplanting date at which you remove the old plants.

FIGURE 22.2 First cut of basil.

FIGURE 22.3 Basil after first cut.

It is best to use *Fusarium*-resistant varieties for indoor or greenhouse culture. Several Italian basils with disease resistance are "Aroma 2" and "Nufar." These seeds are available as "organic" as well as pelleted (clay coating) of inert National Organic Program compliant materials (Figure 22.4). Pelleted seeds are coated with a clay-base material that enables easier sowing and at the same time maintains moisture around the seed to prevent desiccation during germination.

Asian or Thai basils are used as a condiment in Thai and Vietnamese dishes. Several varieties are "cinnamon" and "sweet Thai" basils. These take about 64 days from seeding to maturity. Their leaves at 2″ are somewhat smaller than Italian basils. Often the blooms of these basils are used for flower bouquets. Cinnamon grows to 26–30″ tall while the sweet Thai is shorter at 12–18″. Care of the plants and the hydroponic systems are the same as for the Italian basils. There are citrus basils, "Lime" and "Mrs. Burns Lemon," that have a distinct citrus flavor and aroma. They are used to add a citrus flavor to fish and salads. The leaves are about 2″ long and the

FIGURE 22.4 Pelleted lettuce seeds.

plants grow from 20″ to 24″ tall taking 60 days to maturity. Once again grow and train them as for Italian basils.

Fine leaf or Greek basils are used like regular basil in pesto, soup, stuffing, or any vegetable dish, especially beans, peppers, eggplants, and tomatoes. Their flavor is stronger than Italian basils. "Spicy Bush" basil matures in 70 days with 1″ long leaves. Plants can be grown in pots or beds reaching a height of 8–14″. "Pistou" basil is a compact form of basil ideal for container growing. Leaves reach ½″ long with a height of 6–8″.

Purple basils may be used for garnishes and cut flowers. Some varieties are "Dark Opal," "Red Rubin," and "Purple Ruffles." These require about 80 days to maturity. Leaves are about 3″ long and the plant height reaches 16–24″. These purple basils normally contain up to 20% of green or variegated plants. I have grown them successfully in a peatlite bed as well as in NFT hydroponic systems. They will grow in plant towers, but the taller basils may lean over as they mature, causing shading of the plants below. As a result, it is not the best hydroponic system for basils apart from the low-profile varieties. Plant training and harvesting procedures are the same for all basils. Of course, if you want them to flower they must not be cut back as often as if they are to be used for the leaves and stems only.

HERBS

Most herbs grow well in peatlite beds and in plant towers using coco coir, mixes of peatlite with perlite or rice hulls, and in perlite by itself. Select more compact forms or those that hang down in the plant towers. Some of the most successful types that

I have grown in plant towers with a perlite substrate include chervil, regular chives, garlic chives, cilantro, dill, fennel, lavender, marjoram, mint, oregano, moss parsley, Italian (flat leaf) parsley, rosemary, sage, savory, and thyme.

"Vertissimo" chervil is slow-bolting and vigorous, and is hence good for greenhouse culture. It has a mild, sweet anise flavor and is popular for salads, micro greens, and garnishing. It takes about 2 months to first cutting. Chervil may be harvested for 2–3 months depending upon the weather. Under hot, summer conditions, it should be replaced after 3–4 months from sowing. The first harvest can be as early as when the plants reach about 4″ in height. Permit them to re-grow 4″ or taller before the next cutting. Chervil germinates in 10–14 days.

There are two types of chives: the "Fine Leaf" and the "Chinese Leeks/Garlic Chives." The chives have a mild onion flavor. The glove-shaped flowers may be used as an edible garnish. "Fine Leaf" chives have slender round leaves and are for fresh use. They take 75–85 days from sowing to first harvest. If properly maintained by frequent harvests, thereafter they will continue producing for almost a year. "Chinese Leeks/Garlic Chives" have thin flat leaves with a delicate garlic flavor. The flowers are edible and are used in bouquets. They take about 90 days to mature from sowing; however, you may begin cutting the leaves once they reach 6–8″ in length, but do not cut them back more than 3″ from the plant base (crown). This length allows sufficient photosynthetic leaf area for the plant to quickly re-grow. Chives germinate within 7–14 days.

Cilantro/coriander is very easy to grow in plant towers in bunches at the corners of the pots. All herbs that are directly sown in the plant towers should have 8–10 seeds sown at each corner to obtain a "bunch" of plants. Cilantro can also be grown as a micro green. The foliage of this plant is known as "cilantro," while the edible seed is "coriander." Some popular varieties are "Calypso" and "Santo" that grow to leaf harvest within 50–55 days from sowing reaching 12–18″ tall. These varieties are slow to bolt so are ideal for greenhouse hydroponic culture. They may be grown using plant towers or NFT. Cilantro seeds are actually fruits that contain two or more seeds. "Santo" seeds are available as "monogerms" whereby the seeds (fruit) have been split to get individual seeds permitting more precise planting. Also, the split seeds germinate faster than the regular fruit seeds. Sow six to eight seeds directly in the plant towers allowing 7–10 days for germination. If you cut the cilantro early when it reaches about 8–10″, two to three harvests will be possible before it goes to seed (bolts). Change the crop about every 3–4 months.

Dill may be grown for the foliage only or for the flowers. They take 40–55 days for first leaf harvest as shown in Figure 22.5, or 85–110 days for seed. Dill takes 7–21 days for germination. "Bouquet" grows to 38–42″ at maturity. However, to cut it for leaves in cooking begin harvesting when the plants reach 8″ tall. Cut it back lightly allowing about 4–5″ growth for regeneration. If you keep it cut back lightly each time it re-grows to 8–10″ tall, the plant will last for about 3–4 months. For use in making pickles, and so on, where the flower is needed, only one harvest is possible as the plant has matured at that time. "Fernleaf" is dwarf dill slow to bolt. It reaches 26–32″ in height. It has dark blue-green foliage and is best for growing in containers or in the plant towers. "Verling" dill is better for ornamental or cut-flower use. The leaves may be used for garnishing and culinary purposes. The plant grows to about 42–48″. Sow 10–12 seeds in the corners of the plant towers.

FIGURE 22.5 Dill in plant tower.

Fennel has feathery foliage with a sweet flavor used in salads, Cole slaw, and dressings. There are "Bronze" and "Bronze and Green" varieties. The seeds germinate within 7–14 days and mature within 50–60 days to a height of 24–36″. Sow four to six seeds per pot corner in the plant towers. These also should be harvested numerous times from when they reach about 8″ in height. Keeping them trimmed will permit three to four harvests between cropping over a 3–4 month period.

Lavender prefers a well-drained substrate and so does well in perlite in the plant towers. It will grow for a year between crop changes. Germination occurs within 14–21 days growing to a plant height of 12–30″. Sow four to six seeds per plant tower pot corner or start them in Oasis cubes and transplant one cube with four to six seedlings after 3–4 weeks. It can be harvested for the foliage or the purple flowers for fragrance. It takes 100–110 days from seed to flower. If harvested for foliage begin once the plants reach 8″ in height and continue harvesting as it re-grows to about 10–12″. As the plants age allow longer growth between the crown and cutting

height during harvesting to avoid dieback that will eventually occur within the lower part of the plants.

"Sweet marjoram" has an aroma similar to oregano, but sweeter and more balsam-like. It will grow for a year between crop changes providing it is cut back on a frequent basis of every 3 weeks or so. It germinates within 7–14 days and matures within 80–95 days to a height of 8–24″. In the plant towers, directly sow about 10–12 seeds per pot corner. As the plants grow they will hang down as if in hanging baskets. This is similar for most of the herbs grown in plant towers. Begin initial harvesting as the plants reach about 8″ tall. Cut them back lightly to within 3–4″ from their base. Do not allow them to flower in order to keep them succulent. When harvesting any of these herbs that hang down, carefully pull them apart into a bunch with your hand and make one clean cut straight across the top of the bunch keeping at least 4″ of plant remaining. As the plants progressively re-grow allow more of the base to remain to avoid cutting into old material that will eventually suffer some die back.

Spearmint is the most common mint grown for culinary use. Mint seeds are very small so sow, about 15–20 seeds per pot corner. Germination is within 10–14 days. The plants will reach 18–36″ as they mature and hang down in the pots. They mature within 60 days for the first harvest when they reach about 10″ long. As with other herbs in the plant towers, they will hang down and need to be separated by hand during harvesting. These plants will easily re-grow for up to a year providing they are correctly cut back frequently, within 3-week intervals.

"Greek oregano" is used in Italian and Greek cooking. It germinates within 7–14 days and will grow to 8–24″ over 80–90 days. Begin harvesting when it reaches 8″ in length. With time it hangs down and like many of these herbs will completely cover the entire pots of the plant tower (Figure 22.6). Sow about 8–10 seeds per pot corner. Begin harvesting on a regular 3-week period once the plants reach 8″ in length. These plants will continue growing for a year between crop changes.

There are two types of parsleys: curled parsley ("Forest Green") and Italian or flat-leaf parsley ("Giant of Italy"). "Forest Green" is a standard variety of curled or moss parsley. Parsley is slow germinating at 14–30 days. Directly sow 10–12 seeds per pot corner. Parsleys will grow between 16″ and 18″ in height within 75 days. As with other herbs begin harvesting as the plants reach 6″ tall. As they continue maturing, they will hang down in the pots to form a mass of plants. Harvest them regularly every few weeks to keep them succulent. Do not cut back the plants to less than 4–5″ during cropping. They will easily last a year between crop changes. Periodically as dieback occurs in the plant bunches remove the dead plant material to prevent fungal infection. This is also very important with chives. Italian or flat-leaf parsleys have large dark green leaves and strong upright stems initially until they begin to hang down in the plant towers as they mature. If you grow these herbs in pots or beds, they will not lodge as they do in the plant towers.

Rosemary germination is slow and irregular at low rates. To overcome this use "primed" seeds that give faster and more uniform germination than raw seeds. Use primed seeds within 6 months of purchase as viability falls with time. Germination occurs within 2–3 weeks and plants mature between 120 and 180 days. You may start cutting the tips after 80–100 days. It is best to sow (about four seeds) in Oasis cubes and transplant to the plant towers after 4–5 weeks. Starting the seedlings in

FIGURE 22.6 Oregano in plant tower.

Oasis cubes has the advantages of regulating watering carefully and at the time of transplanting allowing the placement of several cubes in a pot corner when only a few seeds germinate in some of the cubes. Rosemary will grow for a year in the plant towers between crop changes. By that time, a lot of woody stems with the dieback of leaves occur in the center of the plants reducing the harvestable succulent shoots. With continued growth, the plants hang down and will have to be cut further out from their base by trimming off the outer 4–5″ of shoot growth.

"Common Sage" has a wide variety of culinary uses. Its dusty green leaves are used in dressings, sauces, and teas and is a great source for dried floral wreaths. Sow six to eight seeds directly in the pot corners. Germination is within 1–3 weeks and maturity at 80–90 days. Start harvesting the shoots when the plants reach 6″ in length. Sage will hang down in the plant towers, so frequent cutting every few weeks is important to keep the plants succulent. Sage can easily last up to a year between crop changes. It will grow from 16″ to 30″ long as it cascades down covering the entire plant tower (if the tower is only sage).

Summer or "Common Savory" with its peppery flavor adds spice to dishes. Sow six to eight seeds directly into the pot corners with germination taking 7–14 days. Plants will grow between 10″ and 18″ within 60–70 days. Start harvesting the shoots when the plants reach 8″ in height. Savory is similar to chervil and will need crop changes every 3 months.

"Summer Thyme" is used in many culinary dishes. It germinates in 3–4 weeks and is ready for first harvest after 3 months. Since it is slow growing, it is best to sow 15–20 seeds in Oasis or rockwool cubes. Transplant to the towers after 5–6 weeks. Sowing in cubes enables the selection and combination of cubes in the plant corners to get adequate plant numbers per pot corner (usually at least 8–10 plants per corner). The plant height is 6–12″ as it hangs down in the towers. Thyme will be productive for about 6–8 months before changing the crop. Start harvesting the shoots when they reach at least 6–8″ in length. Grasp a handful as a bunch and cut straight across with a scissors leaving at least 4″ of growth remaining (Figure 22.7). As the plants mature, they will start to dieback at the center so the shoot tips must be harvested

FIGURE 22.7 Cutting of thyme in "bunch" with scissors.

repeatedly further from the plant base leaving from 6″ to 8″ for re-growth. This will keep them more succulent by not cutting them back hard. If they are cut back hard the plants may die.

When planting herbs in plant towers, it is important as to the position in the tower where specific herbs should be located. Locate upright herbs such as basils and chives in the top pots and the others that hang down in the middle and lower pots. Try to keep the ones that cascade most near the bottom of the plant tower so that they do not grow over the others below. A typical arrangement of a plant tower for growing many of these herbs may be starting from the top pot down: chives, basil (it is preferable to grow basil in NFT to avoid the lodging), parsley, chervil, cilantro, dill, fennel, thyme, lavender, sage, rosemary, marjoram, and mint. Since the number of pots per plant tower should not exceed 10, make up at least two plant towers or combine several herbs in the same pot of the tower.

In summary, when growing herbs in plant towers the plants will hang down as if they were in a hanging basket. This form of growth will cause competition for light for the adjacent pot immediately below. To assist in reducing this shading keep plants pruned from an early stage as soon as they reach 6–8″ in length. Frequent cutting back of the outer shoots will keep the plant succulent and reduce dieback in the center of the plant. When harvesting hanging herbs (as most are) take a handful and bunch them together as you cut the shoots back using a scissors. Be careful to always, especially during the first harvest, allow at least 4″ of growth between the cut and the crown (base) of the plant. Cutting back too hard will retard re-growth and even possibly kill the plants. As the plants mature, continue to cut further away from the crown to avoid cutting into the woody older growth. Do this by cutting a maximum of 4–5″ of the shoot growth at any given time. Do not allow the plants to flower unless their use is for floral arrangements and not culinary additives.

Sow lavender, rosemary, and thyme in Oasis or rockwool cubes and transplant to the plant towers after about 5–6 weeks when the seedlings reach about 3″ tall. Sow the others directly into the substrate of the plant tower pot corners. After sowing, either add about ¼″ layer of medium on top of the seeds or mix the top of the medium so that the seeds go below the surface. It is important to pre-soak the substrate with raw water prior to sowing the seeds and again after sowing. Thereafter, for the first 3–4 days, manually water the pots with raw water using a watering can. Check to be sure that all drip lines are working and that the medium remains moist between irrigation cycles.

Some herbs, such as chives, lavender, marjoram, mint, oregano, parsleys, rosemary, and sage, will continue growing well for a year provided they are frequently cut back as soon as the shoot tips grow 4–5″ from the previous harvest. Replace thyme after 6 months, and basils, chervil, cilantro, dill, fennel, and savory after 3–4 months. Whenever the plants become dry in the interior of the bunch getting woody, not rapidly forming new succulent growth, they should be changed. Be careful with the drip lines: If the stakes become plugged with plant growth then the solution will be reduced causing wilting and dieback of the plants. Similarly, if too much solution is applied and it runs out of the pots moistening the plants, dieback will also occur (Figure 22.8). This dead plant material has to be removed to prevent disease infection. Periodically, prune out dead plant material, especially for chives

FIGURE 22.8 Dieback in sweet marjoram due to excess watering.

and parsley to allow rejuvenation of the remaining shoots from the crown and to reduce the risk of diseases (Figure 22.9).

Several photos are presented to demonstrate the type of growth expected with herbs in plant towers (Figures 22.10 and 22.11).

VINE CROPS

Vine crops include eggplants, European cucumbers, peppers, and tomatoes that are all trained vertically by strings and support wires above. While many staking (indeterminate) varieties may be selected for growing indoors or in greenhouses, it is best to stay with the special greenhouse varieties as they have proven to perform best under controlled environments. Nonetheless, if there are certain heirlooms that you wish to culture for their flavorful fruit, regardless whether they are staking or

FIGURE 22.9 Remove dieback of chives due to aging.

bush (determinate) plants they will grow indoors with hydroponic culture. The main reason for using staking varieties is to better utilize the vertical space in the growing area.

EGGPLANTS

Greenhouse eggplants are becoming very popular in the market due to their smaller size and firm fruit with few seeds and fleshy interior. There are now special greenhouse staking varieties available. High-yielding purple varieties include "Taurus," "Berinda," and "Agora." "Taurus" and "Berinda" are DeRuiter seeds and "Agora" from Rogers NK. "Tango" is a white eggplant with a cylindrical fruit 7″ long by 2″ in diameter. This is also a DeRuiter seed. There are many bush forms of different colors and shapes. These may be grown hydroponically, but they will not yield as heavily

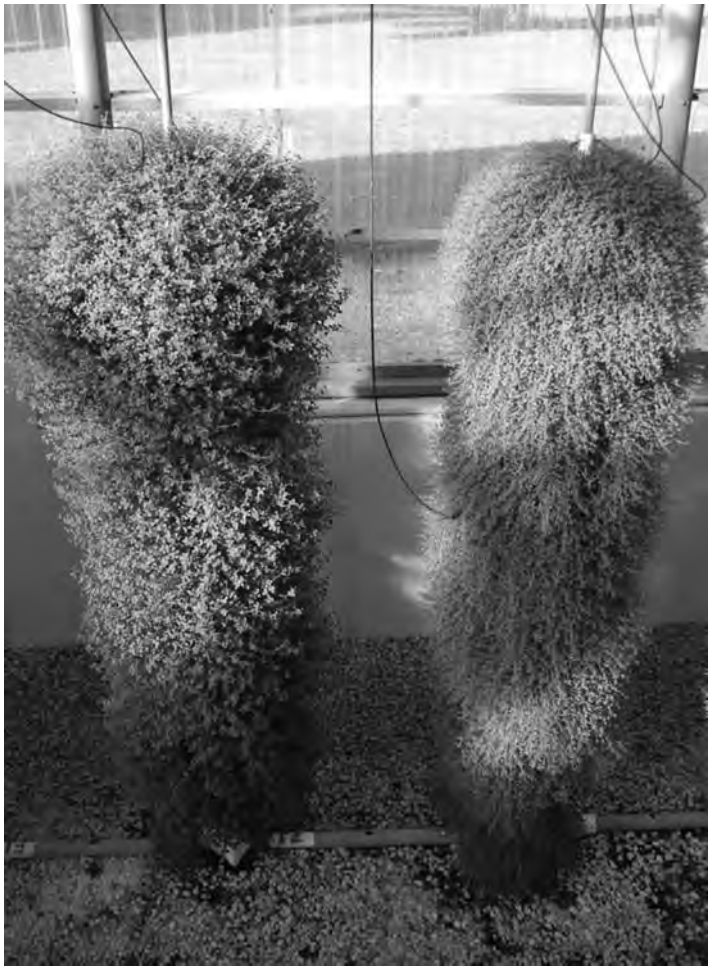

FIGURE 22.10 Location of drip lines in plant towers with thyme. (Courtesy of CuisinArt Golf Resort and Spa, Anguilla.)

as the staking ones. Several I have grown in plant towers are "Hansel" (purple) and "Fairy Tale" (purple and white stripes). These are compact bush types about 2 ft tall. They mature in 65 days compared to the greenhouse staking ones that take about 11 weeks.

EUROPEAN CUCUMBERS

These are the "Long English" seedless (parthenocarpic), burpless types that are shrink wrapped in supermarkets to prevent moisture loss due to their thin skin. There are many varieties; the choice depends largely on your environmental conditions such as light intensity, temperature, and relative humidity. Most are now all female (gynoecious) plants. Varieties I have found to be best for humid conditions that are resistant

FIGURE 22.11 Plant towers (left to right): mint, sage, sweet marjoram, thyme, and chives. (Courtesy of CuisinArt Golf Resort and Spa, Anguilla.)

to Powdery Mildew fungus include "Dominica," "Logica," "Marillo," "Camaro," "Fidelio," and "Flamingo." Other popular cultivars include "Bologna," "Corona," "Discover," "Jessica," "LeReine," "Optima," "Pandorex," "Sandra," "Santo," and "Toska 70." Try a number of different varieties under your specific conditions to determine those most resistant to diseases and most productive. These cucumbers take about 10–12 weeks from sowing to first harvest. In some areas two crops per year are feasible; however, from my experience in many locations, I prefer to change crops every 3–4 months to obtain high yields.

BEIT ALPHA (BA), (PERSIAN PICKLES), (JAPANESE) CUCUMBERS

These are similar to the European cucumbers in that they produce seedless fruits with thin skins. A number of varieties in my experience that are highly productive and tolerant to powdery mildew are "Jawell," "Katrina," "Nimmer," "Sarig," "Suzan," and "Manar." "Manar" is a DeRuiter variety that is most resistant to powdery mildew. Both European and BA cucumber seeds germinate within a few days of sowing. Harvest fruits when the fruit is between 1.25″ and 1.75″ in diameter and from 5″ to 6″ long. The first harvest is usually a week or so earlier than the European cucumbers. Grow at least four crops per year as they cannot be trained the way European cucumber plants are when they reach the support wire. Allow them to grow over the support wire and hang down without cutting the main stem.

PEPPERS

All peppers will grow well hydroponically regardless of whether they are greenhouse or field varieties. However, once again when growing indoors or in a greenhouse use staking varieties in order to use the growing area most efficiently. If you have some favorite varieties that you wish to grow, certainly use them, even if not greenhouse cultivars. With bush varieties, the cropping period will be shorter than the staking greenhouse varieties. Most garden varieties take from 55 to 75 days from sowing to first harvest, whereas the greenhouse ones take about twice that time, normally close to 4 months from sowing. The bush varieties will produce up to several months, so with these cultivars, three crops per year may be rotated, whereas the greenhouse plants yield for 7 months or longer, and so are a single crop per year.

The most popular greenhouse peppers are the sweet bell peppers. Now a few hot peppers and mini bell peppers are entering the market. Bell cultivars are yellow, orange, and red in color. There are many varieties available from various seed houses. Some varieties that I have found very productive include "Bachata," "Cigales," "Lesley," "Samantha," and "Striker." These are yellow fruits, but unfortunately "Samantha" and "Lesley" are no longer available. The seed companies keep on changing varieties, introducing new ones every year, so you must try new cultivars as they are developed. Orange varieties include "Arancia," "Magno," "Orange Glory," "Paramo," and "Sympathy." Red cultivars include "Fantasy," "Jumilla," and "Zamboni." Most of these varieties produce blocky fruits weighing from 200 to 240 g (7–8.5 oz).

Some hot varieties are "Fireflame" and "Habanero Red." "Habanero Red" is a bush (determinate) variety that is relatively hot having a scale of 400,000 Scoville units. The fruit size of "Habanero Red" is 2″ wide by ¾″ long, whereas "Fireflame" is an indeterminate Cayenne type with fruit length up to 6″.

Several mini, small bell, sweet peppers are "Tinkerbell Red" and "Tinkerbell Yellow." These mature in 60 days and produce fruits 1.5″ × 1.5″ (3.7 cm × 3.7 cm).

TOMATOES

Tomatoes fall into a number of types such as beefsteak, tomato-on-vine (TOV), cherry, grape, plum, cocktail, roma, and heirloom. Any of these can be grown hydroponically indoors or in greenhouses, so the choice depends upon personal likes for the specific fruit. All of the varieties exemplified are indeterminate (staking).

Beefsteak tomatoes are the more traditional types of large fruits weighing from 7 to 9 oz (200–250 g). Common greenhouse varieties are "Beverly," "Blitz," "Caiman," "Caramba," "Caruso," "Dombito," "Geronimo," "Match," "Matrix," "Quest," "Rapsodie," "Style," and "Trust." "Blitz" and "Match" are no longer available.

A cluster or TOV tomatoes now make up about 70% of the fresh market. The fruit weight of TOV varieties is between 3 and 5 oz (90–150 g). These are the tomatoes packaged as trusses of fruit, but they can be harvested individually if grown for personal use. Popular red varieties include "Ambiance," "Brillant," "Clarance," "Clermon," "Endeavour," "Grandela," "Success," "Tradiro," and "Tricia." "Lacarno" is yellow and "Orangaro" ("DRK 920") is orange in color.

TABLE 22.1
Recommended Vegetable Varieties for Hydroponic Culture

Vegetable	Type	Varieties
Arugula	Roquette	*Astro
	Sylvetta	Wild Rocket
Bok Choy	Dwarf	*Green Fortune, *Red Choi, *Takuchoy, F1 Hybrid Dwarf Bok Choy, Dwarf Bok Choy, Extra Dwarf Bok Choy, Huo Guo Chai
Lettuce	Bibb/Butterhead	Buttercrunch, *Charles, Cortina, *Deci-Minor, Milou, *Ostinata, *Rex, *Salina, *Vegas
	Leafy	Black Seeded Simpson, *Domineer, *Malice, *Frizella, Waldmann's Dark Green, *Red Sails, *New Red Fire
	Lollo Rossa	*Dark Red Lollo Rossa, Locarno, *Revolution, Soltero
	Multi Leafy	Multi Red 1, Multi Red 2, *Multi Red 3, Multi Green 1, *Multi Green 2, Multi Green 3
	Red Oakleaf	*Navarra, *Oscarde, *Red Salad Bowl, *Ferrari, *Aruba
	Green Oakleaf	*Cocarde, *Tango, *Green Salad Bowl
	Romaine/Cos	Green Forest, *Parris Island, *Outredgeous (red), *Rouge D'Hiver (red)
Lettuce mixes		Encore Lettuce Mix, *Allstar Gourmet Lettuce Mix, *Five Star Greenhouse Lettuce Mix, *Wildfire Lettuce Mix
Basil		*Italian Sweet Basil (Genovese), Aroma 2, *Nufar, *Cinnamon, *Sweet Thai, *Lime, *Mrs. Burns' Lemon, *Spicy Bush, *Pistou, *Dark Opal, *Red Rubin, *Purple Ruffles
Herbs	Chervil	*Vertissimo
	Chives	*Fine Leaf, *Chinese Leeks/Garlic Chives
	Cilantro	*Calypso, *Santo
	Dill	*Bouquet, *Fernleaf, Verling
	Fennel	Bronze, Bronze and Green
	Lavender	*Ellagance Purple
	Marjoram	*Sweet Marjoram
	Spearmint	*Common Mint
	Oregano	*Greek Oregano
	Parsley	*Forest Green (moss or curled), *Giant of Italy (flat or Italian)
	Rosemary	*Primed Rosemary
	Sage	*Common Sage
	Savory	*Common Savory
	Thyme	*Summer Thyme
Vine Crops:		
Eggplants	Greenhouse	*Agora (purple), *Berinda (purple), *Taurus (purple), *Tango (white)
	Garden-Compact	*Hansel (purple), *Fairy Tale (purple and white stripes)
Cucumbers	European	Bologna, Corona, *Camaro, *Discover, *Dominica, Fidelio, Flamingo, Jessica, LeReine, *Logica, *Marillo, Optima, Pandorex, *Sandra, Santo, *Toska 70
	Beit Alpha	Jawell, Katrina, *Nimmer, *Sarig, *Suzan, *Manar

(*Continued*)

TABLE 22.1 (*Continued*)
Recommended Vegetable Varieties for Hydroponic Culture

Vegetable	Type	Varieties
Peppers	Sweet Bell	*Bachata (yellow), *Cigales (yellow), *Lesley (yellow), *Samantha (yellow), Striker (yellow), *Arancia (orange), *Mango (orange), Orange Glory, *Paramo (orange), *Sympathy (orange), *Fantasy (red), Jumilla (red), Zamboni (red)
	Hot	*Fireflame (cayenne), Habanero Red
	Mini Bell	Tinkerbell Red, Tinkerbell Yellow
Tomatoes	Beefsteak	*Beverly, *Blitz, *Caiman, Caramba, *Caruso, *Dombito, *Geronimo, *Match, Matrix, *Quest, *Rapsodie, *Style, *Trust
	Cluster (TOV)	*Ambiance, *Brillant, *Clarance, *Clermon, *Endeavour, Grandela, *Success, *Tradiro, *Tricia, *Lacarno (yellow), *Orangaro (orange)
	Cherry	*Conchita, *Favorita, *Juanita, *Goldita (yellow), *Zebrino (green stripes)
	Grape/Plum	*Dasher, *Flavorino, *Picolino, *Goldino (yellow), Orangino (orange)
	Cocktail	*Red Delight
	Roma	*Granadero, *Naram, *Savantas
	Heirloom	*Brandywine (red), Striped Green Zebra (green stripes), Yellow Pear (small pear-shaped fruit)

*Varieties that I have successfully grown hydroponically.

Cherry tomatoes have a small fruit size weighing less than 0.5 to 0.9 oz (15–25 g). They also are marketed attached to their flower clusters; however, for backyard growing select the ripest individual fruit during harvesting to get the best flavor. Some popular varieties include "Conchita" (red), "Favorita" (red), "Juanita" (red), "Goldita" (yellow), and "Zebrino" (green stripes).

Grape/plum varieties of similar fruit size to cherry tomatoes are "Dasher," "Flavorino," and "Picolino," which are red; "Goldino," which is yellow; and "Orangino," which is orange.

"Red Delight," a cocktail variety, has a fruit size from 1 to 2.6 oz (30–75 g). This is similar to the Roma varieties that include "Granadero," "Naram," and "Savantas," all of which are red and weigh between 3.5 and 5.3 oz (100–150 g).

Heirloom tomatoes that are indeterminate and therefore suited for greenhouse or indoor hydroponic culture include "Brandywine" (red), "Striped Green Zebra" (green stripes), and "Yellow Pear" (small pear-shaped fruit of ¾–1 oz or 20–30 g).

Most of these tomatoes take 70–80 days from sowing to first harvest. They will also grow for the entire year as a single crop, but if they lose vigor and yields decline they can be replaced once to obtain two crops per year.

Table 22.1 summarizes varieties suitable for indoor hydroponic culture. Of course, as mentioned earlier, you may grow most varieties of vegetable crops hydroponically.

23 Seeding, Transplanting of Vegetable Crops

Like most things in life, if you want to be successful you must start out laying the basis for success at an early stage. Growing plants is similar. You must start with the healthiest, most vigorous seedlings to get healthy, productive plants as they mature. There is a phrase in agriculture that states: "Start with a good seedling to achieve a healthy plant; start with a poor, weak seedling to end in a significantly less productive plant." Optimum environmental conditions will greatly influence the health and productivity of the crop. Important factors that influence seed germination include temperature, water, and oxygen, all of which are important to initiate rapid growth and development of the embryo in the seed to begin a healthy life of the seedling plant. Most seed catalogs give you information on the optimum temperature ranges for seed germination. They often provide preferences of the soil conditions and light for optimum plant growth. Follow those tips closely. Soil conditions generally refer to drainage, which directly influences oxygen levels for seed germination and subsequent growth. The type of substrate plays an important role for the best germination of seeds as it must have adequate moisture retention, but at the same time provide good aeration as oxygen is needed in the germination process. With hydroponic substrates, these oxygen levels will be provided by all substrates, however, for higher moisture retention you can use a peatlite or coco coir medium, whereas more "well drained" substrates refer to vermiculite, coarse sand, and perlite.

Always observe the percentage germination given on seed packages to determine how many extra seeds to sow to get the correct final number of plants. For example, if the germination test indicates 85%, multiply the inverse of that number times the final number of plants (e.g., 30 plants) required (100/85 × 30 plants = 35 plants). It is also a good practice to sow at least 10% more seeds than you need for transplanting as that allows you to select the best seedlings for transplanting and growing on. Using this example then, (35 + 10% × 35 = 39) sow 39 seeds. The number of seeds to sow per growing cube or tray cell varies for different crops, especially herbs that are sown in clusters or bunches. Some seeds, such as lettuce, are available in both raw form and in pelleted form. In some cases, seeds may be purchased as clusters or as primed seed to facilitate sowing and improve germination. In the presentation on individual crops that follows, a guide is given for the number of seeds to sow per cube.

ARUGULA

Arugula seed is fairly small with a seed diameter of about 1 mm (about 1/32″). This small seed is difficult to accurately sow a specific number of seeds. Some seed companies make seed clusters of about 12 seeds stuck together with a water soluble

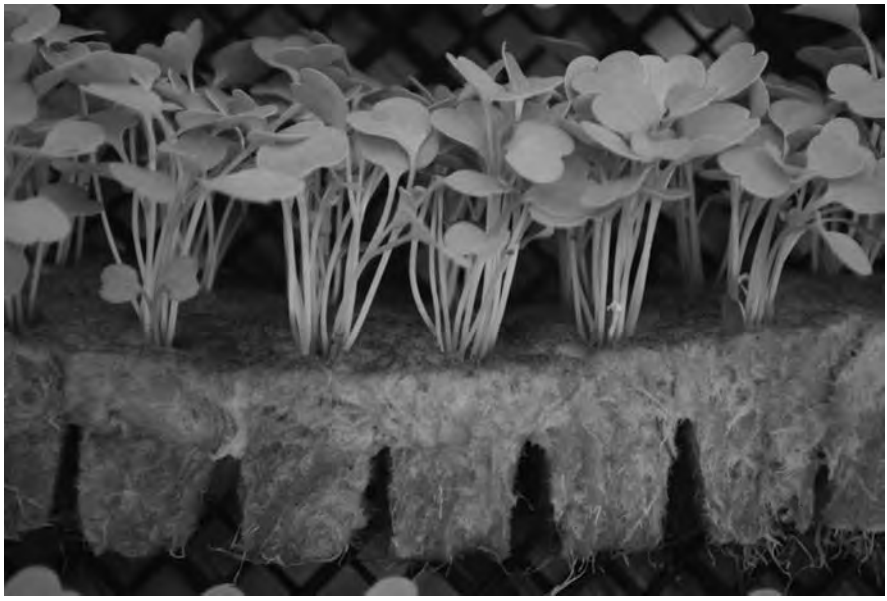

FIGURE 23.1 Arugula seedlings at 9 days from sowing in rockwool cubes.

adhesive. Usually about 10–12 seeds per cube are the correct density. Alternatively, the seedlings can be thinned upon germination by cutting the extra ones off near their base with a scissors. Be careful not to damage the ones to be kept when thinning. Sow the seeds in Oasis or rockwool cubes (Figure 23.1) or in a peatlite mix in 72-celled compact trays. In pots or beds of peatlite substrate sow the seeds directly into the containers. If you wish to transplant from cubes to nutrient film technique (NFT) or raft culture do so 14–18 days after sowing the seeds.

Optimum temperature range for germination of arugula is 65–75°F (18–24°C) and pH between 6.0 and 6.8. Most vegetable crops like a pH from 6.2 to 6.5. Germination takes from 5 to 7 days. Use raw water for the first 7 days until they reach about an inch high, then use a half-strength nutrient solution until transplanting. They like full light to partial shade. It takes about 3–4 weeks to first harvest and can be harvested two more times thereafter at 3–4-week intervals. As the plants mature they become bitterer in flavor so it is best to replace them after three cuttings.

BOK CHOY

Sow bok choy in rockwool or Oasis cubes and transplant them to NFT, raft culture, or plant towers at 21–25 days. Sow one seed per cube or if more, thin them to one plant at 12 days of age using a scissors when they are about ¾″ high. Geminate the seed with raw water for the first 8 days, then a half-strength nutrient solution until transplanting. Optimum germination temperatures are between 75°F and 83°F (24–28°C). The round, black, bok choy seed is slightly greater than 1⁄16″ in diameter and therefore is easier to handle than that of arugula.

LETTUCE

Lettuce, as I am sure you are aware, is a cool-season crop, so lower temperatures are more favorable for it. Temperatures from 60–65°F (16–18°C) are best for germination and growth. The lettuce seed can become dormant at high temperatures, especially above 68°F (20°C). Using pelleted lettuce seed expands the temperature range for germination by overcoming dormancy induced by high temperatures. Keep pelleted and raw lettuce seed cool and dry in a refrigerator and use it within a year, especially pelleted seeds. For indoor and greenhouse growing use heat-tolerant varieties that are resistant to bolting (going to seed) and tipburn (browning of outer edges of leaves). Varieties having these qualities are listed earlier in Chapter 22.

Start lettuce in Oasis or rockwool cubes. I prefer rockwool cubes as they do not break apart as easily as Oasis during transplanting, especially in raft culture where it is crucial for the seedling cube to remain intact as the cubes are squeezed a little to fit into the planting holes of the boards. We are fitting square cubes into round holes of the boards. The principle of square pegs in round holes applies here. With some NFT channels, the holes are square and the cubes fit with little effort. The seedlings should be transplanted at 18–21 days of age to their production boards or channels.

Here is a procedure to increase the production efficiency of your growing system by the use of two transplant stages. With a raft culture system use a 2 ft × 4 ft board containing 72 seedlings (six rows of 12 plants) and transplant the first time at 10–12 days as the seedlings reach their third true-leaf stage. Depending upon how many plants you are growing, you can reduce the size of this first-stage transplant to 2 ft × 2 ft with 36 plants. A rule-of-thumb is that the nursery area should be about 20% of the overall system. The seedlings are transplanted to their second-stage (final production) boards at their fourth true-leaf stage (about 18–21 days from sowing) or 8–10 days from the previous transplanting. At this stage there are 18 plants (three rows of six plants) per 2 ft × 4 ft final production board. The lettuce will be ready to harvest within another 24–30 days making the total cycle about 45 days from sowing.

With NFT the procedure is similar. Plants are seeded in Oasis or rockwool cubes (stage 1) and are transplanted for the first time in special nursery NFT channels that have plant holes at 2″ within the channel and channels are separated at 4″ center to center. A 12-ft channel fits 72 transplants. Again, proportion the nursery trays at 20% of the overall production capacity. Start the seedlings in 1″ rockwool cubes (200 cubes/pad) or Oasis 1 "thin cut" Horticubes (276 cubes/pad). Grow these seedlings in the trays on the propagation bench for about 18 days before transplanting to the nursery channel(s) (stage 2). Keep them in the nursery channel for about 10–12 days (28–30 days from sowing) before transplanting them to the finishing channels (stage 3). Within 20–25 days harvest the mature lettuce from the growing (finishing) channels giving you 14 crops per year. In effect, the lettuce only occupies the production area for 20–25 days; that is efficiency in the use of your growing space! Of course, the final production period depends upon the amount of light and day length. This will vary somewhat for a backyard greenhouse due to the season. Using supplementary lights to extend the day length to 14 hours should greatly assist in achieving shorter production periods.

LETTUCE SALAD MIXES

Germinate the seeds as for lettuce between 60°F and 65°F (15.5–18°C). These salad mixes are directly seeded into beds of a peatlite or coco coir mix as outlined in Chapter 22. Harvest within 3 weeks cutting the top shoots with a scissors or electric knife. Allow 3 weeks or less between harvests for re-growth of the leaves. This harvesting can be repeated several times for a total of three harvests between crop changes.

BASIL

Basils germinate very quickly, usually within 4–5 days at temperatures between 75°F and 80°F (24–27°C). Use any well-drained substrate such as a peatlite or coco coir mix if growing them on in peatlite beds or containers. They also germinate and grow well in rockwool and Oasis cubes if you wish to transplant to an NFT or raft culture system. Once the first true leaves appear start using a half-strength nutrient solution to feed them. Transplant seedlings to the final production area after 18–21 days, once they are 2½–3″ tall with at least three sets of true leaves (Figure 23.2). The first

FIGURE 23.2 Sweet basil transplanted at 18–21 days with three sets of true leaves.

harvest should take place approximately 7–10 days after transplanting to force the plant to form multiple lateral shoots as was explained in Chapter 22. I have found that sowing 3–4 seeds in a plug or cube to transplant within 3 weeks gives a good cluster of basil plants. Space them about 6″ × 6″ in the production area. Spacing them similar to the lettuce will permit their developing rapidly into a bushy form of multiple stems. Do not allow them to flower unless you specifically want the flowers as this maturing of the plants causes them to become woody. Regardless, rotate the crop every 3 months when making multiple harvests. Otherwise, for a single harvest, as is usually the case for NFT or raft culture production, remove the plants when they reach 6–8″ in height.

HERBS

Details as to the number of seeds to sow, germination time, and days to maturity of herbs are presented in Chapter 22 when evaluating the best varieties for indoor culture. Best germination temperatures for most herbs lie from 65°F to 75°F (18–24°C). In my experience with growing them in tropical climates, they will tolerate fairly high temperatures, up to 85–90°F (29.5–32°C) under greenhouse conditions. Do not hesitate to grow most herbs under fairly wide temperature ranges, they will survive. Again, I highly recommend planting herbs in plant towers with a peatlite, coco, or perlite mixture as production is greatly increased through training these low-profile plants in the limited space of your home or backyard greenhouse.

With slower to germinate herbs such as thyme and rosemary, start them in rockwool or Oasis cubes and transplant thyme after 6–7 weeks and rosemary at 8–9 weeks. Figure 23.3 shows thyme in Oasis cubes at 30 days that is almost ready to transplant to plant towers.

EGGPLANTS

Eggplants, tomatoes, peppers, and cucumbers are vine crops so seeding and transplanting are similar, with some specific differences. Seed eggplants in 1½″ rockwool cubes. Place one seed per cube. Be sure to thoroughly flush the rockwool cubes with raw water of pH from 6.0 to 6.5 prior to sowing the seeds. This will adjust the pH of the cubes and completely wet the cubes throughout. You do not need to cover the seed holes of the cubes as long as the RH is maintained at least at 75%. Water the cubes several times a day with raw water for the first 8–10 days as the seeds germinate within 6–8 days (compared to tomatoes that take 3–5 days to germinate). Germination temperature is similar to tomatoes at 75–78°F (24–25.5°C). After 10–12 days, replace raw water with a half-strength nutrient solution. Separate the cubes and double the spacing after 10 days laying them on their sides. This side position adds to rooting when transplanting to the rockwool blocks at 14–21 days for tomatoes and eggplants (Figure 23.4).

Eggplants initially are slow in growing, but once transplanted to the rockwool blocks, they begin to grow much faster. Space six blocks per mesh tray flat in a checker-board configuration to maximize distance among the plants (Figure 23.5).

FIGURE 23.3 Thyme seedlings 30 days old in Oasis cubes ready to transplant.

Eggplants are held in the rockwool blocks in trays for a period of 4–5 additional weeks making them 6–7 weeks from seeding before transplanting to the final production system (Figures 23.6 and 23.7). This propagation period is several weeks longer than for tomatoes. Of course, the exact time is dependent upon temperature and light conditions. Be sure to keep the temperature of the medium and nutrient solution at 75°F (24°C) as cool temperatures will slow root growth and overall development resulting in a weak plant. Refer to Figures 23.4 through 23.7 to see the transplanting and subsequent growth of seedlings ready for final transplanting to the growing system.

Various seeding cubes, trays, and transplanting blocks are shown in Figure 23.8.

CUCUMBERS (EUROPEAN AND BEIT ALPHA-BA)

Initial sowing of seeds and propagation is similar for both European and Beit Alpha (BA) cucumbers. Sow one seed per 1½″ rockwool cube after thoroughly moistening the cubes as described for the eggplants. Beit Alpha cucumbers are started and produced under the same conditions as for the European (Dutch) types. Optimum germination temperature is 75°F (24°C). They will germinate within 2 days. Keep

FIGURE 23.4 Laying eggplant seedling on side in cube at 20 days as transplant to rockwool block.

the temperature of the cubes at 73°F (23°C), but do not worry if this is not exact, just maintain temperature within a few degrees of this to get vigorous root growth. If using artificial lighting (indoors) use a 14–18-hour day regulated by a time-clock.

Do not lay the seedlings on their sides as is done with eggplants, tomatoes, and peppers. Just space them to double once the cotyledons (initial seed leaves) are fully expanded and you can see the first set of true leaves forming in the center. Within 7 days, as the first set of true leaves expand to a little longer than the cotyledons, transplant them to the rockwool blocks. Use a dilute half-strength nutrient solution to water them after the first week. Thoroughly flush the rockwool blocks with a half-strength nutrient solution to adjust the pH between 5.8 and 6.2 before transplanting the seedlings to the blocks. Space seedlings at six blocks per mesh tray as for the eggplants. Transplant the seedlings to the final growing area when they are 18–28 days old and have 3–4 true leaves as shown in Figure 23.9. This age depends

FIGURE 23.5 Eggplant seedlings 34 days from sowing and 14 days after transplanting to rockwool blocks spaced six blocks per mesh tray.

FIGURE 23.6 Eggplant seedlings ready to transplant at 47 days old (27 days after transplanting to blocks).

FIGURE 23.7 Eggplants transplanted at 47 days old to bato bucket perlite system. Note: Clamping of stems and drip lines at base. (Courtesy of CuisinArt Golf Resort and Spa, Anguilla.)

upon the temperatures and seasonal sunlight (in a hobby greenhouse) or supplementary lighting indoors.

Cultural techniques for growing BA versus European cucumbers differ in spacing and training, as discussed in Chapter 24.

PEPPERS

Once again, as with the other vine crops, use the same size of rockwool cubes and prepare them with raw water as outlined earlier. Sow one seed per rockwool cube. Peppers like somewhat higher germination temperatures than eggplants, cucumbers, and tomatoes from 77°F to 79°F (25–26°C). Keep these temperatures day and night.

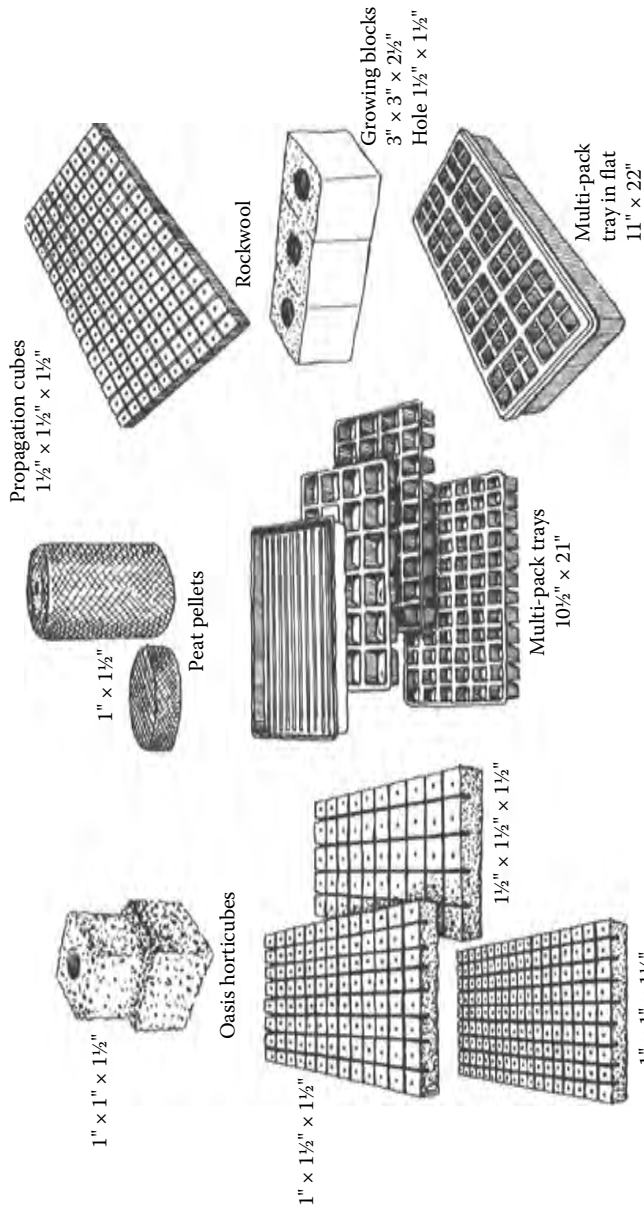

FIGURE 23.8 Various seedling trays, cubes, and blocks. (Drawing courtesy of George Barile, Accurate Art, Inc., Holbrook, New York.)

FIGURE 23.9 European cucumbers ready to transplant to growing system. (Courtesy of CuisinArt Golf Resort and Spa, Anguilla.)

Maintain relative humidity (RH) from 75% to 80%. Once the seeds germinate (about 4–6 days) lower the air temperature to 72–74°F (22–23°C). Provide supplementary lighting of 5500 lux (510 ft-c) with 18-hour day length.

Within 10 days after the first set of true leaves have expanded slightly longer than the cotyledons, lay the peppers on their sides as you double space the cubes in the mesh trays. Peppers grow slower initially than cucumbers and tomatoes. Transplant the seedlings to 3″ rockwool blocks at 3–4 weeks from sowing. Prepare the rockwool blocks with dilute nutrient solution as described earlier for cucumbers and space them six to a mesh tray. When transplanting to the blocks lay the seedlings on their sides in the large round holes of the blocks. By placing your thumb next to the top of the cube while pushing it into the block you can protect the pepper seedling stem from breaking as shown in the photo for the eggplants (Figure 23.4). Air temperatures during this stage should be about 73°F (23°C). The seedlings will be ready to transplant to the final growing area within 3 weeks from putting them in the rockwool blocks (between 6 and 7 weeks from sowing).

TOMATOES

Soak the 1½″ rockwool cubes as with the other vine crops and sow one seed per cube. Use raw water of pH 5.5–6.0 to lower their pH. There is no need to cover the holes of the cubes after sowing. Always adequately water the rockwool cubes and blocks to prevent their drying. Usually several times per day is fine. Regulate temperatures from 77°F to 79°F (25–26°C) day and night during germination. They will

germinate within 3 days. Once the cotyledons are fully expanded and the first set of true leaves are 1″ long start using a dilute nutrient solution as was done for the other vine crops. At this stage reduce the temperature regime to 73°F (23°C) during the day and 68°F (20°C) at night.

Lay the tomato seedlings on their sides as they are double spaced in the mesh trays at 10–14 days from sowing. Once the true leaves are fully unfolded (about 3 weeks after sowing) transplant them to the 3″ rockwool blocks being careful to soak the blocks as for the other vine crops and placing the seedlings on their sides into the blocks. Placing them on their sides will promote adventitious roots to form along the buried portion of the stem base as with the peppers and eggplants (Figure 23.4). This increases the number of roots resulting in stronger seedlings. Arrange six blocks per mesh tray in a checker-board pattern as for peppers and eggplants (Figure 23.5) to give them sufficient space so that their leaves do not overlap as they continue expanding. They will be held in the propagation area for another 3 weeks before transplanting to the production system at an age of 5–6 weeks from sowing of the seeds.

Whenever seedlings are transported to other areas within the propagation location or transferred to new trays, these facilities and growing trays must be sterile. Clean all of these with a 10% bleach solution prior to bringing the seedlings in contact with such items. Likewise, when soaking the rockwool cubes and blocks do it in a clean sink to avoid any contamination. Small precautions like these will go a long way in your successful growing of seedlings.

In soil gardening such cleanliness is not possible; this is a great advantage of hydroponic growing to produce plants free of diseases. It is not difficult and contributes greatly to your success!

24 Training of Vegetable Crops

In Chapter 23, we discussed the details of sowing seeds and the first transplanting stage. For vine crops, it was transplanting the seedlings in their 1½″ rockwool cubes to the 3″ rockwool blocks. The final transplanting to the growing system, at what stage to do this, and subsequent training of the plants through to their maturity are presented here. Procedures vary with specific crops. With all crops at this final transplanting step, you must select the most healthy, vigorous plants first, leaving any smaller, leggy plants last or hopefully to discard them as they should be part of that extra 10% of seedlings that were raised.

With regard to sanitation, there is no point in getting your plants to this final stage of transplanting as clean seedlings and then abandoning those precautions during the final transplantation. That may still introduce diseases. Follow strict sanitation procedures in moving the transplants on carts, in trays, and finally to their placement to the final hydroponic growing system. Keep the seedlings in their original mesh trays until you place them on the slabs or pots ready to be positioned. Do not place seedlings on other nonsterile surfaces before putting them on the slabs or pots. This sounds a little over done, but at any time those seedling roots are exposed to unclean surfaces a disease organism that may be present can enter the roots causing decline in the mature plant as it develops. You have spent a lot of effort in getting the best, most healthy, disease-free seedlings to this final stage so do not jeopardize their continued health through lack of these precautions at the final point.

ARUGULA

There are two ways to cultivate arugula, as mentioned in Chapter 23: either sow directly into beds or pots of peatlite substrate or start them in 1″ rockwool or Oasis cubes and transplant to the hydroponic system at 14–18 days.

In 5-gallon plastic nursery pots sow more or less 30 seeds uniformly on the top. Pre-moisten the substrate prior to seeding and immediately after. With pots a drip irrigation system may be used to water or do so once a day by hand using a watering can.

For beds sow the seeds in rows 6″ apart. Be careful to pre-wet the substrate before sowing the seeds. If you want to automate the irrigation of beds place "ooze" or "soaker" hoses one foot apart along the length of the bed. Soaker hoses are thin-walled drip lines of ½″ diameter that have very small holes every 4″ along the hose. This gives more uniform distribution of the water along the bed length. You can make your own "soaker" hose by using ½″ black poly irrigation tubing and inserting 0.5 gph emitters into it at 4″ centers. Do not place drip lines on the emitters, simply

let them drip directly below to the substrate. At 3″ on each side of the irrigation line sow the seeds in line. This can easily be done by using a broom handle or ¾″ diameter pipe to press a groove into the substrate ½″ deep. Sow the seeds into this channel almost touching each other about three to four seeds across. This will give a dense growth of the arugula in the rows and they will spread to the side forming a complete cover of plants in the entire bed. From sowing the seeds to the first cutting, it will be about 4 weeks. When harvesting use a scissors or electric knife to cut sections of the bed at a time. After three harvests, about 3 months, it is best to remove the plants and seed again. If you want continued production, seed half of the bed length every 8 weeks or one-third of it every 5–6 weeks to keep continuous young plants growing that will replace the older ones after their third harvest.

For transplanting to nutrient film technique (NFT) or raft culture systems start the seedlings in rockwool or Oasis cubes. Place 10–12 seeds in the each cube after the cubes have been thoroughly flushed with raw water to adjust their pH to near 6.0. To increase the efficiency of production, as was described in Chapter 23 under "Lettuce," use two transplant stages. Arugula has the same spacing and a similar growth rate to lettuce, so follow the lettuce procedure. The first transplant stage is at 10–12 days when the seedlings have formed three true leaves. With raft culture transplant them to the nursery raft having 4″ × 4″ spacing. In NFT transplant them to the nursery channel having holes at 2″ centers with channels spaced 4″ center-to-center. They are held in this nursery location for 8–10 days before transplanting them to the final finishing or production boards/channels. They will be ready to begin harvesting within 2 weeks.

If you are not growing a lot of arugula, this extra transplanting stage probably does not justify the additional work. Then, simply transplant to the final production boards/channels at 12–18 days from sowing in the cubes. It is more feasible to use the two-transplant procedure if you wish to harvest the arugula one time at its maturity between 3 and 4 weeks and not make multiple harvests.

When the seedlings are transplanted to the production area use a complete nutrient solution, not the diluted half-strength one used on the seedlings when on the propagation bench.

BASIL

The cultivation of basil is very close to that of the arugula described earlier, except that it should be transplanted and not directly seeded. If you wish to transplant to pots or beds of peatlite medium, start the basil seeds in the same peatlite mix in 72-celled compact trays. Sow four to five seeds per cell or cube as outlined in Chapter 22. For NFT or raft culture follow the preceding procedures for arugula. The cropping cycle closely follows that of arugula.

The principal difference between arugula and basil is the harvesting method. Arugula is simply cut back to within 2–3″ above the crown area, whereas basil must be trained through precise cutting stages. The first cut of basil is as it reaches three sets of true leaves at the third- to fourth-node. Cut the tops about ¼″ above the node of the leaves. You may think that this is more complicated than growing in soil, but the fact is the procedure is exactly the same whether growing basil hydroponically or

in soil if you wish to maintain a juvenile plant to prevent it from becoming "woody" stemmed. Subsequent harvests take place as the plants produce side shoots with at least three sets of leaves. Repeat this cutting technique with all side shoots as they continue to bifurcate as they are cut back. This produces bushy (multi-stemmed) young growth. However, after about 3 months the plants need to be replaced as they eventually become woody as they mature, especially if you allow them to flower. Seed the new crop about 3 weeks before taking out the older plants so that the down time between crops is reduced to 10–12 days. You may also sequence the cropping so that a portion of the plants are at different ages. In that way, you get continuous production.

Feed the plants with a complete nutrient solution after transplanting to the production system. Optimum temperatures for basil are from 70°F to 80°F (21–27°C).

BOK CHOY

Bok choy is transplanted to plant towers, NFT, or raft culture 21–25 days after sowing in rockwool or Oasis cubes. To transplant to the plant towers place one seedling in each corner of the pots. Use the end of a broom handle to indent a hole in the substrate to a depth of 1½″ to facilitate the placement of the seedling with its cube. The crown (area where the plant stem enters the cube) of the plant should be at the surface of the medium. Water the substrate before and immediately after transplanting. You may have to water a few times by hand over the next few days until the roots take hold in the substrate to prevent any possible drying of the seedling cube. After that the drip irrigation system will provide sufficient moisture with a full-strength nutrient solution. Bok choy grows well at temperatures from 70°F to 80°F (21–27°C). The first harvest is 20–25 days after transplanting when a semi-head forms. Of course, you may harvest it at earlier stages, particularly if you want tenderer "baby" bok choy.

If you are growing bok choy in one plant tower, sequence the planting of each pot a few days apart to obtain continued production. For example, if the plant tower has 10 pots, each pot will have four plants, except the top pot that can have eight plants to give a total of 44 plants. If you sow four plants every second or third day you will get plants ready to harvest every day. Unless you are really crazy about bok choy, this one plant tower will be too much for your personal consumption, so why not use half of the plant tower for bok choy and the other half for arugula, basil, or lettuce!

To grow the bok choy in NFT or raft culture, the cropping cycle is the same as for that of the plant towers. You will not have to hand water after transplanting as they receive solution during the continuous irrigation cycles of these hydroponic methods. I have grown it in the A-frame NFT system to increase production (Figure 24.1).

LETTUCE

The normal single transplant procedure at 18–21 days to the production system (Figure 24.2) may be used or if you wish more efficient utilization of space follow the two-transplant method. The more efficient method of several transplantings into

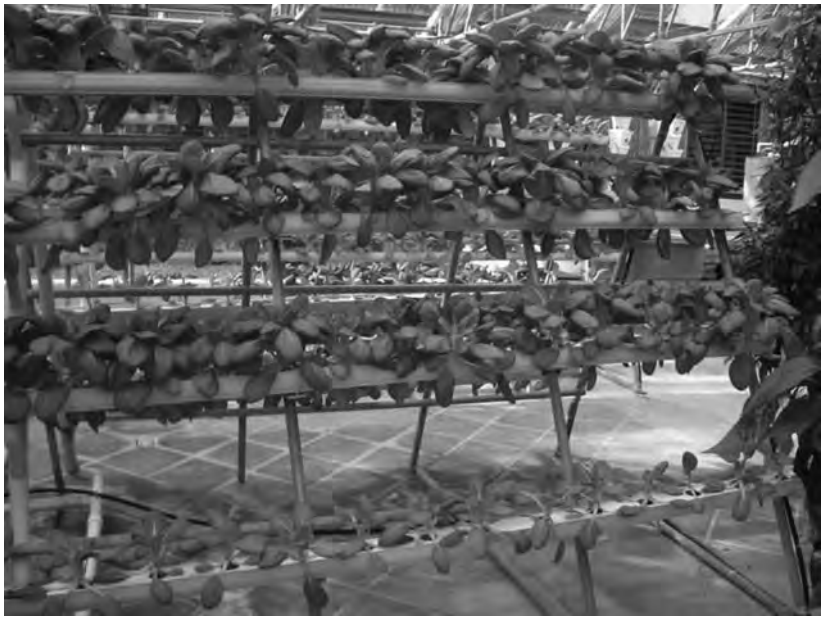

FIGURE 24.1 Bok choy in NFT A-frame. (Courtesy of CuisinArt Golf Resort and Spa, Anguilla.)

FIGURE 24.2 Lettuce seedlings 20 days old in rockwool cubes.

raft culture and NFT were described in detail in Chapter 23. Here is a brief summary of the cropping procedure:

1. Sow in rockwool or Oasis cubes.
2. Grow for 18 days (Stage 1).
3. Transplant to the nursery board/channel at 18 days (Stage 2).
4. Grow for 10–12 days (28–30 days from sowing).
5. Transplant to production (finishing) board/channel (Stage 3).
6. Grow for 20–25 days in the production system.

Total days from sowing to harvest: 18 + 12 + 25 = 55 days. This gives 14 crops per year. Remember that the cycle length will vary by a number of days depending upon your light source. In a backyard greenhouse, the cycle may be reduced by up to 3–5 days during the long day length of summer and increased by 5 days or more during the short winter days. Supplementary lighting of 14-h day length will assist in reducing this period during the winter months.

Since you are growing this lettuce for your personal use, it can be harvested earlier, especially if you wish a "baby" form that is just over half the normal mature age. Most folks like salads every day, so in that case the cropping cycles are sequenced to meet that objective. For two lettuces per day, it is easiest to sow four to five every second day and then harvest a few heads several days younger than others. This is a little more work in that every few days you must sow and transplant to replace the ones harvested.

Ideal temperatures for lettuce are from 60°F to 75°F (15.5–24°C). Use a full-strength lettuce formulation upon transplanting. You should be able to purchase a leafy salad formulation from a hydroponic outlet. This formulation is good for lettuce, arugula, basil, and bok choy. If such a formulation is not available, you can always use a general vegetable one.

HERBS

Most efficient growing of herbs is in plant towers. They can also be grown in pots or a bed of peatlite medium by direct sowing. Some herbs such as chives, mint, thyme, and watercress do fine in NFT and raft cultures. However, when using these methods sow the seeds in rockwool or Oasis cubes and transplant. The details of growing herbs were presented in Chapter 22, so please refer to that section. Most herbs tolerate wide temperature ranges. Use a leafy vegetable formulation or any other available.

EGGPLANTS

Eggplants started in rockwool cubes and blocks are transplanted to the hydroponic production system at 6–8 weeks of age as shown in Figure 23.6 of the previous chapter. They will have about three pairs of leaves at that stage.

It is important to prepare the final growing system prior to transplanting. This includes securing the support strings, soaking and flushing of the rockwool or coco

coir slabs and perlite in pots. Support string should be wound onto "Tomahooks," special hooks containing extra string for the lowering of vine crops (Figure 24.3). These hooks can be purchased from CropKing or other greenhouse suppliers or make up your own with galvanized #9 wire as shown in the diagram. Put about 40 wraps of string on the hook in order to accommodate lowering of the plants. The hooks allow you to move the plants at the top and lower them in a process called "lowering and leaning." As you move the vine crops in one direction to take up the stem length, you lower them by unwinding several rounds of string. Use plastic string as it is strong and remains clean, not accumulating dust or fungal spores. As the seedlings are placed on the slabs or pots fasten a plant clip under a pair of strong leaves (Figure 24.4) to support them by the string. The clips have a hinge at the back that pinches the string to secure it from sliding down.

Rockwool slabs must be thoroughly wetted prior to placing them out. You may do this by irrigating the slabs until they fill up with solution (normal strength at this time) as they have no drainage slits made as yet. Let them soak for about 24 h. Then, assuming you have already made the collection tray for the slabs to sit in and drain, cut 1″ slits on the inner side in three places that are not directly under the plant locations. This will permit drainage and collection of the leachate by the

FIGURE 24.3 Tomahooks attached to overhead support cable. (Courtesy of CuisinArt Golf Resort and Spa, Anguilla.)

FIGURE 24.4 Placement of plant clip on tomato plants during transplanting. (Courtesy of CuisinArt Golf Resort and Spa, Anguilla.)

underneath gutter to direct the solution back to the nutrient tank. At the sites where the plants will be placed cut a cross (X) wide enough to fit the rockwool block as you place it directly onto the rockwool medium. Insert a drip line stake into the corner of the block.

If using coco coir slabs, the procedure is similar in soaking the slabs, but they will already have drainage holes. Flush them to get complete moistening of the medium and allow at least 25% leachate with this initial irrigation. Thereafter, irrigate to 15% leachate. The nutrient solution will adjust the pH and electrical conductivity (EC) of the slabs to 6.0–6.4 and 2.0 mMhos or slightly higher depending upon the nutrient formulation.

Plant spacing with both of these types of slabs is the same by placing one row of slabs end-to-end with five plants in each slab. The slabs are slightly longer than 3 ft (1 m or 39″). Single rows are 6 ft apart. Position the plants on the slabs to get them equally distant between all plants on the slabs. The first plant and last plant in each slab is about 3″ from the ends with the others 8″ apart since the slabs are actually 39″ long. You do not need to be exact. As the plants grow, the support training above will space them equally. The spacing should work out close to 4 sq ft per plant.

Bato buckets with perlite substrate are spaced a little differently as discussed in Chapters 13 and 20. Bato buckets are located on top of a 1½–2″ PVC drain pipe at 16″ centers. The pots are staggered on each side of the drain pipe. The individual plant area approaches 4 sq ft as with slabs. The difference is that each pot contains two plants (eggplants, tomatoes, peppers, Beit Alpha (BA) cucumbers) or one European cucumber (8–9 sq ft/plant).

Pre-soak the perlite with raw water and a complete nutrient solution prior to transplanting. During transplanting bury the seedling blocks about three-quarters of the way into the perlite. With the support strings already in place fasten a plant clamp under a pair of strong leaves to keep the plant upright and prevent it from lodging that may break the plant. Secure one drip stake in each block at the corner, not immediately adjacent to the crown of the seedling.

The foregoing is the transplanting procedure, and now we must look at the training techniques for the continued growth and development of the eggplants. They, like peppers, are trained to two stems per plant. Some growers may keep three stems per plant, especially if the plants are spaced further apart to get more than 4 sq ft per plant, that is, at lower plant density. I have found that two stems with plant area at 4 sq ft works well. The main stems of eggplants are not flexible like those of tomatoes so when they reach the support cable above, remove the growing point.

FIGURE 24.5 Pruning side shoot of eggplant. (Courtesy of CuisinArt Golf Resort and Spa, Anguilla.)

FIGURE 24.6 Clamping eggplant.

Keeping more stems also slows the growth rate of the plants in arriving at the wire. For shorter crops (less than 5 months from seeding), it is better to increase the planting density with less stems to keep vigor.

As the plants reach about 2 months from sowing of the seeds or about 2 ft in height select the two most vigorous stems to continue developing and prune out the others as shown in Figure 24.5. Remove all side shoots up to 3 ft in height and then cut back side shoots to one node. Clamp the main stems using separate support string for each shoot. Attach plant clips under sturdy leaves about every foot along the main shoots (Figure 24.6) or twist the string around the stems for support. Later when the plants are 6 ft tall, allow additional side shoots to form beyond three to four nodes to get extra production and slow down the crop as it approaches the support wire. Sow seeds 6–8 weeks before removing the existing crop so that they will be ready to transplant immediately into the production system when the old crop is terminated. You may harvest all the eggplants, including small "baby" ones, as you take out the plants.

Eggplants do not form large clusters of flowers as do tomatoes. The flowers that form are variable in vigor, so select the large strongest flowers to remain and remove other smaller ones. This will assist in obtaining large, more uniform fruit. You may pollinate the flowers with an electric toothbrush as for tomatoes, but it is not necessary. Commercial growers often use a hormone weekly to create more fruit development,

greater fruit weight, and earlier production. You may harvest the fruit when it changes in color from a dark, shiny purple to a little more pale purple at the tip of the fruit and becomes slightly less glossy. Use a pruning shears or scissors to cut the fruit from the plant to get a nice, clean cut that will heal rapidly, thus decreasing any threat of diseases.

Optimum temperatures for eggplants are 70°F–72°F (21–22°C) during the day and 65°F–68°F (18–20°C) at night. A tomato nutrient formulation suits eggplants fairly well, but they are more susceptible to Mg deficiency indicated by yellowing of the older lower leaves. A nutrient solution EC of 2.5 mMho is good with pH 6.0–6.5. Enrichment of the atmosphere with CO_2 (carbon dioxide) at levels from 700 to 1000 ppm will increase production, but do not exceed 1000 ppm.

Eggplants are a great crop to grow. They produce beautiful flowers and deep, dark purple fruits (purple varieties) or snow white fruits with white varieties. If you like to cook with eggplants, growing your own is very rewarding in that you get firm fruits with few seeds in the greenhouse varieties. In my experience, they are one of the easier vine crops to grow and are very impressive in appearance. Try them, you will be happy to have done so!

PEPPERS

Peppers are next as they are trained similar to the eggplants. The cropping cycle of peppers is based on a single crop annually. They take 4 months from seed to first pick; therefore, more than one crop per year is not feasible, unless they decline greatly in productivity. These greenhouse varieties of peppers grow to about 14 ft in height over this yearly cycle. In low hobby greenhouses or in your home, you will have to lower them, similar to tomatoes. Since pepper stems are brittle, you must exercise caution in lowering them slowly and moving them down the support cable as is described later. You can also grow the normal bush type of garden pepper, if you do not want to deal with the extra work of lowering the staking peppers.

Peppers are transplanted to the production system at 6 weeks of age. At this age, they should be about 10″ tall with about four leaves on the main stem. At this stage, some roots will have begun to emerge from the base of the rockwool block.

Once again prepare the slabs or pots of substrate as presented for the eggplants. Wet the slabs or substrate in pots with a nutrient solution for 24 h prior to setting the seedlings onto the medium. Install the tomahooks with string to the overhead support cable. Transplanting is the same as for eggplants and tomatoes. Spacing and plant density is also the same. Peppers, like eggplants, are trained to two main stems. Support the plants with plant clips on the string when transplanting.

Optimum day temperature is 70°F (21°C) and night temperatures of 61°F–63°F (16–17°C). Maintain a feed EC of 2.5–3.5 mMhos with pH 6.0–6.5.

Within 2 weeks of transplanting, the plants will form two to three stems at a fork. Prune out the third stem if developed leaving the two strongest stems. Each stem must be secured with plant clips to the support string. If the slabs or pots are arranged in a single row, use a V-cordon form of training the plants to the overhead wire where every other plant is supported to the opposite overhead wire as shown in the diagram (Figure 24.7). As the plants grow, they develop side shoots at each node (point on the stem where leaves form). These shoots must be pruned back to allow

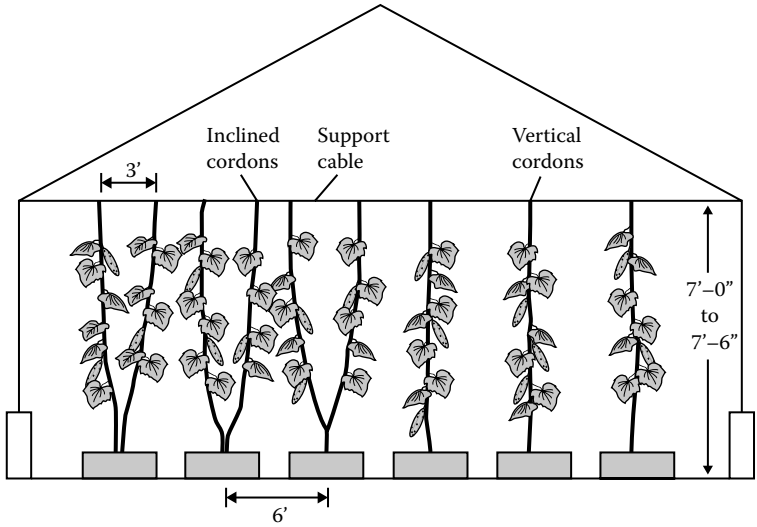

FIGURE 24.7 V-cordon training of vine crops. (Drawing courtesy of George Barile, Accurate Art, Inc., Holbrook, New York.)

one node with a leaf. This extra leaf assists in increasing the overall leaf area of the plant that should help in getting larger fruit. Prune the side shoots by pinching the growing point with your fingers or if they get large use a scissors or pruning shears. Cut them close to the leaf and shoot node.

It is best to remove the first flower that forms at the fork and let the first flower to set fruit at the second node above the fork. This keeps the plant more vigorous initially before bearing fruit. You may also wish to remove the flower at the third node, especially if the plant is showing lack of vigor. After the fourth flower allow all the flowers to set fruit. Unlike tomatoes, pollination of the pepper flowers occurs without assistance from bees or a vibrator such as an electric toothbrush. However, a few cultivars may respond to pollination by enhancing fruit development.

Harvest the fruit with a sharp knife or pruning shears when the fruit is at least 85% colored. Be careful not to cut into other fruits or the stem when cutting the fruit stem (peduncle) of the pepper. The plant must not develop too many fruits at one time as that will reduce the size of the fruit and restrict the growth of the plant. A good balance is to maintain five to six developing fruits per stem. If there are more fruits set, remove the smallest ones among the larger fruits early in their formation.

Color peppers, red, yellow, and orange, are so much more flavorful and nutritious than the green, unripe stage of the fruit. One thing about colored peppers, regardless of whether they are grown in the field or greenhouse, is that they must be 85% vine ripened before harvested as they cannot be picked green and gassed with ethylene to change color as is the case with tomatoes. That is why when purchasing colored peppers in the supermarket they have a superior sweet taste. Growing your own will take that quality one step further by allowing the fruit to ripen 100% in order to gain the best flavor and nutrition. This is a great advantage in growing your own vegetables!

TOMATOES

Tomatoes are the most popular vegetable grown for fresh salads. By growing them yourself, you will benefit from superior flavor and nutrition compared to supermarket products as you can completely vine ripen the fruit. It takes about a week after the fruit begins to change color from green to become fully ripe. Most tomatoes, even greenhouse hydroponic ones, are picked just when they begin to turn color and are therefore about a week away from full ripeness. Of course, they must be harvested at this firm stage to enable shipping them for long distances.

Because of this immature ripeness and gassing the fruit with ethylene upon arrival or in route to the market, the tomatoes have almost no taste compared to fully vine-ripened ones. This excellent flavor and nutrition obtained by fully vine ripening the fruit is your reward for your effort and investment in growing your own tomatoes. And it is fun as a hobby, in addition to the benefits of self-satisfaction of producing vegetables, their very distinct "real" taste and nutrition, not otherwise possible with store-bought produce, will keep you enthusiastic about growing with hydroponics!

Initial training of tomatoes in transplanting at 5–6 weeks from seeding is similar to the eggplants and peppers. Prepare the slabs, bato buckets, pots, and so on as was done with the eggplants and peppers. Have all of the plant support system in place before transplanting. A very healthy tomato transplant is said to be "as wide as tall" at its third to fourth pair of leaves when ready to transplant.

Spacing of tomatoes is the same as for eggplants and peppers at about 4 sq ft of greenhouse floor area per plant. Arrange five plants per slab or two plants per bato bucket as described for eggplants. Clamp the young plants under a strong leaf to support strings with a plant clip to the support string. Training from there differs from the eggplants and peppers in that the tomatoes are trained to one stem only.

Remove all side shoots that form between the main stem and each leaf axil (where the leaf joins the stem). Removal of the "suckers" takes place several times a week in order to pull them off by hand while they are still small, best as they reach 1″ in length (Figure 24.8). Grasp the main stem just below the leaf axil with your thumb and index finger pressing lightly the stem and leaf base so that as you quickly pull the sucker off with the other hand, you will get a clean break as shown in Figure 24.9. A clean scar will heal rapidly without any threat of disease infection. If the suckers get to 2″ or longer, you should use a pruning shears or sharp knife to cut them off close to the base at the leaf axil. Wear vinyl disposable gloves when working on the tomatoes as the acid of the plants causes cracking of your skin and is hard to remove from your hands.

Pollination is very important in achieving high "fruit set," which is the fertilization of the flower and subsequent development of the fruit. Fruit set is successful as you see the small beads of fruits forming (see Figure 24.10) after the blossoms fall. Tomato flowers remain receptive (petals bend back as shown in Figure 24.11) for several days making pollination a daily task. Normally, in commercial greenhouses bumblebees are introduced into the greenhouse to pollinate the flowers. This is not feasible on a small scale, so the best alternative is to use an electric toothbrush. The flowers are termed "perfect" in that they have male (anthers) and female parts (pistil). With the high vibration of an electric toothbrush, as you place the bristle end at

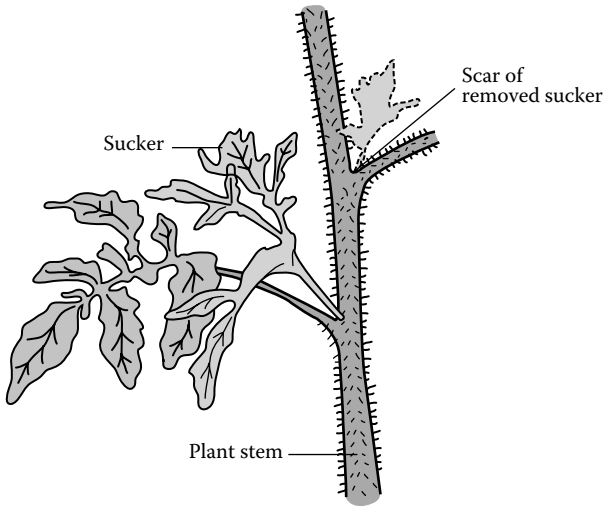

FIGURE 24.8 Tomato sucker (side shoot). (Drawing courtesy of George Barile, Accurate Art, Inc., Holbrook, New York.)

FIGURE 24.9 Breaking sucker off with position of thumb grasping main stem.

FIGURE 24.10 Fruit set of tomato.

FIGURE 24.11 Receptive tomato flowers.

the flower stem (cluster or truss), it will dispel the pollen from the anthers and cause some of it to attach to the female (pistil stigma).

In the case of beefsteak tomatoes, if you wish large fruit, thinning of the tomato fruit on the clusters (trusses) to four to five fruits will produce higher fruit weight. If thinning, do this shortly after fruit set while the fruits are still small (about ¼″ in diameter), so that energy and food is not going to the fruit that you do not want to develop. If your plants are "vegetative," that is, have a lot of large leaves and few fruit trusses, do not take off any fruit from the trusses as keeping all the fruits will help to shift the plant to a more productive state ("generative"). Cherry and "Tomato-on-Vine" varieties do not require truss fruit pruning.

As the tomato vines grow tall and approach the overhead support wire, you will have to "lower and lean" the plants. Do this as you are suckering the plants when they reach the wire above. Do not allow the plants to grow beyond the support wire and fall over as that will cause breaking of the growing point and termination of your crop. Generally, you will have to lower the plants every week about a foot in length at a time to prevent any breakage and lessen stress on the plants. Lower the plants by unwinding several wraps of the string on the "tomahooks" and moving the hook along the support wire in one direction. During this process, the lower portion of the stem may be laid down. Support the lower stem portion by a wire support above the slab or rest it on top of the bato buckets or pots. Stem supports may be made of ¾″ or 1″ diameter PVC pipe with tees or using number nine galvanized wire (Figures 24.12 and 24.13). Alternatively, you can make a PVC support frame above the slabs to hold the lowered plant stems. Then, remove three to four leaves from the base of the lowered main stem to improve air circulation, thus avoiding potential disease infection. Do not remove more than three to four leaves at any time during a week or you may shock the plant by reducing too much leaf area at a time.

You may think this is a lot of work. It is, but recall that in your backyard garden you do not have to follow such a procedure as your tomatoes will get frozen out before they reach beyond 7–8 ft in height. However, even outside with a summer crop, as the tomatoes are harvested the lower leaves will yellow and fall off. To prevent fungal infection, it is best to remove these leaves as you would for indoor hydroponic culture.

Within 4–5 weeks prior to starting a new crop, pinch the growing tip of the plants. This will stop any further vegetative growth and force nutrients to the remaining fruit as they ripen. During the crop change over remove all plants, clean up all plant debris, change the slabs or medium in pots, and sterilize the pots, floor, nutrient tank, drip lines, return channels, tomahooks with string, and so on with a 10% bleach solution. Soak the components in the bleach solution for at least several hours. This sterilization process is the key to preventing any disease or insect carry over to your next crop. You will then be ready for a new start with the next crop. Start your seedlings in another location under supplementary lights 5 weeks prior to removing your crop. In that way, as soon as you have discarded all the old plants, cleaned and sterilized the area and growing components, you can immediately transplant the new crop to the hydroponic system. This clean-up applies to all crops during their change to a new crop.

The normal cropping cycle for tomatoes is 1 per year. If you find your crop slowing greatly in productivity, you can terminate it and use a two-crop system annually.

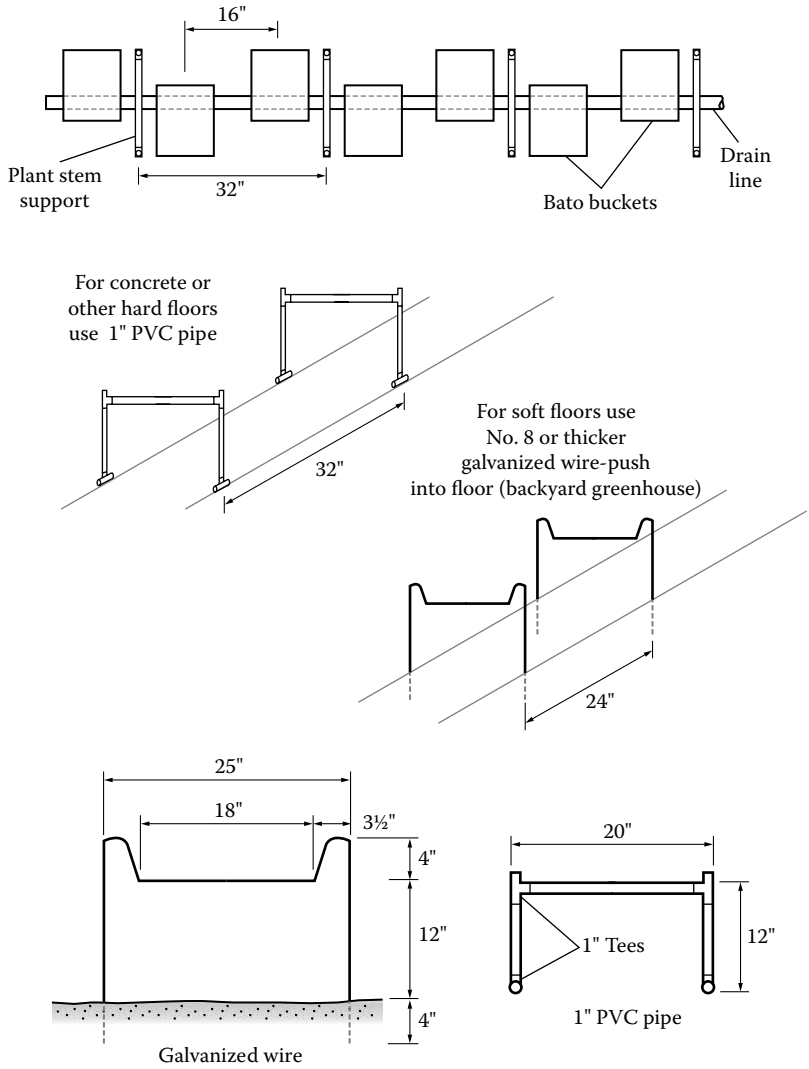

FIGURE 24.12 Tomato stem supports.

This may be necessary due to pest or disease infection or simply restricted space to accommodate the plants as they continually need lowering.

CUCUMBERS (EUROPEAN AND BA)

I want to discuss these last as their training is somewhat different from the other vine crops. European cucumbers are transplanted to the growing system as the second set of true leaves initially form, but are not fully expanded. This is generally from 14 to 21 days from sowing. The exact time is dependent upon light and temperature

FIGURE 24.13 Tomato pipe stem supports. (Courtesy of McWethy Farms, Three Oaks, Michigan.)

conditions. Do not allow them to grow much beyond this stage as they will fall over (lodge) and it will be difficult to transplant them without breaking their stems. Healthy seedlings ready to transplant are shown in Figure 23.9.

European cucumbers are spaced at half the density of tomatoes (8–10 sq ft per plant). Secure the plants while transplanting to the support strings with the plant clips. Place one plant per pot or two plants per slab. Locate one drip line at the corner of the rockwool block for each plant. In pots having one block with its seedling, place one drip stake at the corner of the block and the other in the substrate of the pot. Within 4–5 days as the plants spread their roots into the substrate and become established, they will grow 6–8″ per day. This means you must train them every day. As they grow support them by wrapping the support string one time between each set of leaves (around the internode). The best way to accomplish this without breaking the tender stems is to pull down on the support string allowing some slack and wrap in a clockwise direction so that you remember not to unwind the plants by not knowing which direction you wound the string the previous day. This is a small but important detail to efficiently care for the plants as it is a daily chore, with pleasure of course, as you see them growing so fast!

You must also remove all the tendrils (the stringy appendages they produce seeking support) on a daily basis. The best procedure then for daily training is in the order of removing the tendril(s), wrapping the string, and then removing side shoots up to several nodes below the tip. By pinching the side shoots last, you have the opportunity of keeping the plant growing should you break the main stem (leader) in

the process of wrapping the string. If breakage occurs, simply allow the nearest side shoot to grow replacing the original growing point. Finally, remove all small fruit up to six nodes to give the plant a chance to grow large leaves that later will be able to support the developing fruit on the main stem.

When the main stem arrives near the support wire above, do not pinch the last two to three side shoots as they will develop as two laterals, one hanging down on either side of the main stem. Support one side shoot on each side of the main stem to the support wire with a plant clip and allow it to grow down as shown in Figures 24.14 and 24.15. Pinch side shoots from these laterals below the third one so that as the fruit is harvested from the laterals (usually only two to three) the next set of side shoots will replace the first as you cut off the older side shoot once it has finished bearing fruit. If you have lots of light you may try leaving several side shoots to develop above the main lateral as they pause in growth until the fruit is harvested from the main lateral.

Pollination is unnecessary as the flowers are all female. That is evident from the miniature fruit behind each flower. You do not want seeds in the cucumbers, they are seedless, so no pollination! If by chance any male flowers form, take them off to avoid pollination. The male flower has no small fruit behind it as shown in Figure 24.16.

Keep the cropping cycle for European cucumber indoors short at 3 months from seeding to termination. At that time, two to three laterals will have produced fruit.

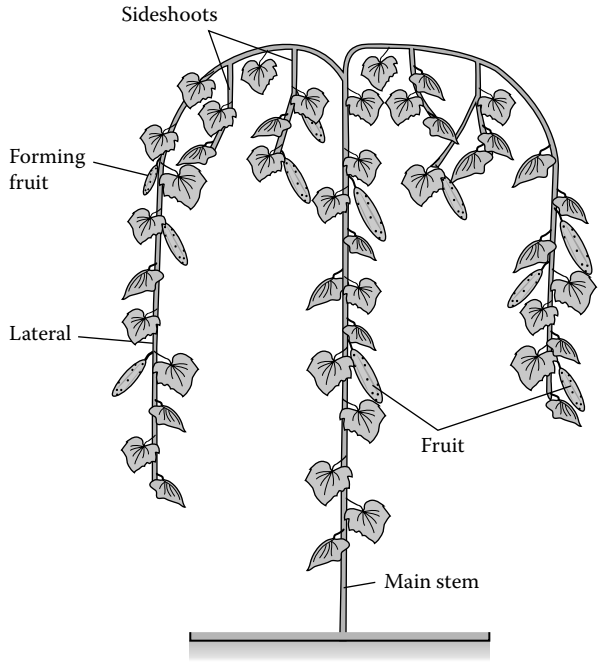

FIGURE 24.14 Training of top of cucumber to allow two laterals over support wire. (Drawing courtesy of George Barile, Accurate Art, Inc., Holbrook, New York.)

FIGURE 24.15 Training of cucumber over support wire. (Courtesy of CuisinArt Golf Resort and Spa, Anguilla.)

FIGURE 24.16 Male cucumber flower.

As the plants get older they become less productive and more prone to pest and disease issues, so to avoid this simply plan on a 3-month crop giving you four crops annually. Remember to start the new plants several weeks before removing the old crop so that as soon as the old crop is taken out you can transplant to the new substrate in pots or slabs. You may attempt to sterilize rockwool or coco coir slabs between crops, but that is a pain as you must remove the plastic wrap and heat them in the oven of your stove to 180–200°F (82–93°C) for at least half an hour. After sterilizing the slabs with heat, wrap them with new polyethylene. In the case of pots, sterilize the pots for at least 1 hour in a 10% bleach solution, let them dry, and then fill them again with fresh medium.

European cucumbers should bear two to three fruits per week per plant, but they stop bearing for about a week as the fruit is all harvested from the main stem and the laterals begin to develop. The laterals do not grow a lot until the main stem fruit is finished.

European cucumbers will grow on a tomato or general vegetable nutrient formulation of EC 2.5–2.8 mMho and pH 5.8–6.3. To avoid the details of making up your own formulation purchase a premixed formulation from a hydroponic outlet. When growing these plants indoors, I recommend that you regulate the environment of temperature and humidity to most closely conform to that of tomatoes as they will likely be your main crop. When growing many crops together, you cannot expect to satisfy all conditions at optimum levels for each one as that is not feasible. Under good conditions for tomatoes, you can successfully grow the other vine crops. Lettuce, however, prefers a lower temperature regime than the vine crops. Keep the lettuce system close to floor level where temperatures are likely to be cooler.

BA cucumbers are spaced and trained differently from European cucumbers. BA cucumbers are spaced similar to tomatoes, about 4–5 sq ft per plant. Transplant four plants per slab or two plants per pot. Transplant these cucumbers at the same two-leaf stage as for the European ones. Secure each plant to a support string using a plant clip and position a drip line at the corner of each rockwool block.

The subsequent training differs in that only the first six to eight side shoots are removed on the main stem and thereafter are pinched at the second node. These cucumbers set multiple fruits at each node. As the plants reach the overhead support cable do not cut the main stem, let it grow over the wire and hang down (Figure 24.17). With a plant clip attach the stem to the overhead support cable. The main stem will continue to grow with its side shoots. Prune all tendrils to prevent their tangling up among other shoots. As the main stem grows down cut the side shoots at three to four nodes. Remove any deformed fruit early to maintain continued production. If the plant sets excessive fruit many will abort. BA cucumbers like the European ones are gynoecious (producing only female flowers). Harvest the fruit at 1.5″ in diameter by 5–7″ in length (depends on the specific variety).

BA cultivars produce 2–3 times as many fruits as European cucumbers, but of course, they weigh a lot less at about 4–6 ounces compared to European types weighing 14–16 ounces. The cropping cycle should be about 3 months to get four crops per year. The EC of the nutrient solution should be maintained between 1.5–2.5 mMhos and pH 5.8–6.5. Use a general hydroponic vegetable formulation available

FIGURE 24.17 Beit Alpha cucumber training main stem over support cable. (Courtesy of CuisinArt Golf Resort and Spa, Anguilla.)

from hydroponic suppliers. Other environmental conditions favorable for European cucumbers are good for BA cucumbers.

With regard to flavor, I find the BA cucumbers have a more distinct "cucumber" flavor than the European ones. One reason they are termed "Persian Pickles" is that the fruit is smaller in diameter and denser giving them a crisp texture. Because of this crispness, they are very sought after by the Middle Eastern ethnic groups as they can be pickled and not just eaten fresh as are the European cultivars (cultivated varieties). Try pickling some and compare them to the traditional garden types. Certainly, they will have softer skins, yet still retain the crispness internally. They are a great treat for salads and pickling!

25 Pest and Disease Control

You may think that growing indoors or in a greenhouse will exclude all pests from getting into your crops. That is not the case; the insects always find their way into any crop location. Even in mid-winter when a lot of the insects are killed by frost, those that found their way into your crop earlier will thrive unless you control them. Environmental conditions within your indoor or greenhouse garden are ideal for pests. Diseases, on the other hand, can be controlled by use of resistant varieties and keeping moisture levels down. In general, a relative humidity of 75% is good for your crops and is not too humid to promote diseases. However, be careful to avoid any leakage from the growing systems that will build up moisture levels and at the same time become a home for algae. As soon as algae grow in wet spots, they attract insects like fungus gnats that will feed also on plant roots, especially of your seedlings. Clean up any leaks and keep the floor dry to prevent these issues.

CLEAN-UP BETWEEN CROP CYCLES

Whenever the crop is terminated and all plants disposed of, the entire growing area must be sanitized to prevent carryover of pests and diseases to the next crop. Prior to pulling the crops spray them with a pesticide to kill most of the flying insects. As you remove the plants place them in large garbage bags to prevent infested plants from spreading pests and diseases. The plant debris can be taken to a garbage land fill or you can bury them in a pit outside covering it after with soil. This is the more difficult way as the pit would have to be dug to about 3 ft in depth. Making a pit could be a lot of work, especially if in the winter when the ground is partially frozen. It is best to take the plant remains to a landfill. If you are a backyard gardener and keep compost the crop debris could be composted.

Vacuum up all small leaves and so on as any plant debris left over could carry insect eggs or overwintering fungal spores. Then, spray the entire growing area with a 10% bleach solution or other disinfectant. This includes the walls, floors, and growing support trays. The growing channels, pond, pots, seedling trays, tomahooks, and plant clips should be soaked in a 10% Clorox solution for several hours.

Disinfectants are oxidizing agents that kill microorganisms. Others besides bleach you may use include “Virkon” (peroxide) and “KleenGrow” (quaternary ammonium). Use safety equipment such as a respirator, disposable gloves, and suit when spraying these compounds as they are irritants to your skin. Never mix bleach with ammonia or acidic solutions as such combinations produce toxic chlorine gases. So, just be careful and there will be no problems! KleenGrow is registered for greenhouse and indoor crop production facilities. Thoroughly wet the surfaces. Use 1.0 oz per gallon of water or 6–8 mL of KleenGrow per liter of water for greenhouse surfaces and equipment. Always read and follow label directions precisely.

INSECT AND DISEASE CONTROL

Exclude insects as much as possible with the use of screens on any intakes that bring in fresh outside air. Sanitation practices including removing any pruning debris and damaged or deformed fruit reduces diseases. After all you would not be happy living in a dirty, cluttered house so keep your plants' living quarters clean also to assist them from becoming sick! Preventing insects from entering will reduce diseases in that many insects suck on plant tissue passing on fungal spores and viruses to your plants. Sucking insects inject viruses into the plants as they rasp or enter the plant tissues with their mouthparts. These insects include aphids, mites, thrips, and whiteflies. They also carry fungal spores on their bodies and transmit them to plants as they suck the juices from the plants creating an ideal point of entry for fungal spore germination.

Prevent diseases by keeping the plants healthy with an active root system. Proper oxygenation, moisture levels, and nutrition all play an important role in healthy, vigorous plants as we discussed earlier. Good hygiene of keeping the growing area clean will reduce the presence of material that may harbor diseases. Be vigilant in recognizing any plant symptoms expressed by the presence of a disease or insect. Early detection and identification of any diseases and/or insects is the key to successful control of these ailments. There are many websites (see Appendix) that give colored pictures of pests and diseases and also recommend control measures. Use these sites for identification and always take photos for future reference.

Take into consideration that the plant symptoms may also be an expression of nutritional or environmental disorders. Plant disorders are discussed in Chapter 10.

As soon as you have determined the cause of the disease or which pest is present, take fast, corrective actions to control them to prevent their spread. Use approved chemical sprays. Seek the use of natural pesticides (bioagents). If these are not sufficiently effective, then apply stronger ones. Do not repeatedly apply the same pesticides in future infestations; vary the type of pesticides to minimize any possible resistance build-up by the pests. An even better approach is to introduce natural predators (beneficial insects) into the crop that will eat or parasitize the pests keeping their numbers limited. These beneficial insects are available through numerous distributors and even hydroponic outlets. Once again there is a lot of information available on the Internet (see Appendix).

COMMON DISEASES

When selecting varieties, as discussed in Chapter 22, you should choose resistant varieties against diseases. The use of resistant varieties will simplify and increase your success. While hydroponic growing greatly reduces the threat of disease in the substrate, it does not prevent diseases in the plant growth above the substrate. Maintaining optimum environmental conditions and controlling pests will help greatly in the prevention of diseases.

Once you think a disease is present start to identify specific areas on the plant that are affected and describe the nature of the symptoms (Figure 25.1). Firstly, identify the area affected: leaves, flowers, fruit, growing tip, stem, crown area, or roots. It may be a combination of these. For example, if the plant wilts during the high light and temperature periods of the day, probably the roots are infected reducing water

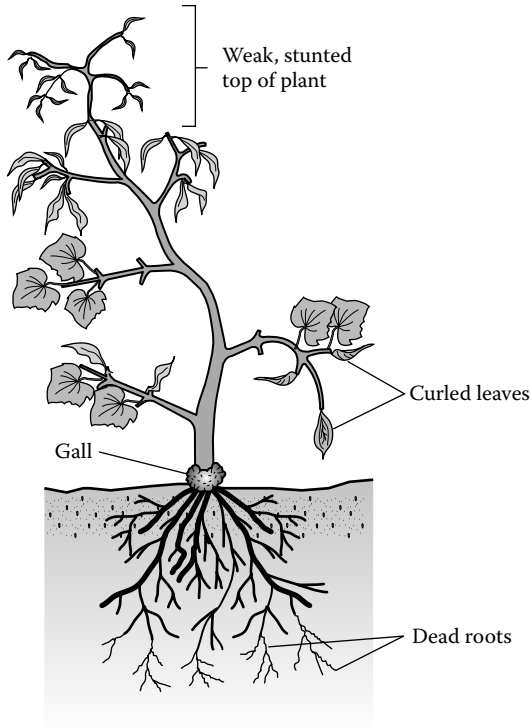

FIGURE 25.1 Disease symptoms on plants. (Drawing courtesy of George Barile, Accurate Art, Inc., Holbrook, New York.)

uptake. Cut some roots to determine whether or not they are turgid and white or soft and slimy. If the latter, you know immediately there is a root problem.

Is the overall plant form stunted or dwarfed? Is the top of the plant very bushy with many small leaves and short internodes? Look for the following symptoms: deformed, wrinkled, rolled, curled, mottled, chlorotic, necrotic leaflets. Look for the presence of spots-concentric or curved, white, powdery, hair-like growth on the leaves (due to some fungi, such as powdery mildew and Botrytis).

Cut the stem on a plant to find out whether or not the vascular tissue is clear and white or brown and soft that would indicate the presence of a disease organism. Any discoloration or softness at the collar (crown) of the plant would indicate a disease. A fruit may be deformed or have spots or lesions pointing to the presence of a disease. After describing and taking photos for future reference of these symptoms go onto websites of the Internet to find photos and descriptions of disease symptoms that may be similar to those of your plants (see Appendix).

Tomatoes

1. *Leaf mold (Cladosporium)*: It starts as a small gray spot on the underside of the leaf and expands into a pale area on the upper surface. Good sanitation,

ventilation, and temperatures preventing high humidity reduce potential infection. Some effective fungicides are available.

2. *Early blight (Alternaria and Septoria)*: Dead spots appear on leaves, attacking older leaves first. Ventilation reduces infection. Remove lower leaves as plants are lowered to increase air circulation thus creating lower relative humidity.
3. *Gray mold (Botrytis)*: These fungal spores enter wounds. That is the reason for cutting leaves with a sharp knife or pruning shears to get a clean surface that will heal quickly. Gray mold appears as a moist rot with a fluffy gray (hairy-like) growth above the infected area. Some fungicides can control the infection at its early stage before the fungus destroys (girdles) the entire plant stem.
4. *Viruses*: Most greenhouse varieties have resistance or tolerance to many viruses. Reduce potential infection by controlling sucking insects that are vectors (aphids, mites, whiteflies).

Eggplants

Since tomatoes, eggplants, and peppers are of the Solanaceous family, they are prone to the same diseases. Tomatoes and eggplants are of the genera *Solanum* and so are very closely related. This family also includes vegetables such as potatoes and some flowers.

1. *Gray mold (Botrytis)*: This is the most prevalent disease of eggplants. Maintain optimum humidity levels through ventilation and temperature. De-leafing lower, yellowing leaves will assist in keeping the humidity near the plant base low. Make a clean break or cut at the base of the leaf petiole (where the leaf joins the stem). *Botrytis* will also affect fruits, stems, and leaves. Cut the fruit during harvesting with a pruning shears or sharp knife to create a rapid healing of the wound. After flowering remove dead flowers that have not set fruit as often *Botrytis* quickly invades these dead tissues.
2. *Stem rot (Sclerotinia)*: This is a fungus that infects the stem of eggplants. Treat it as for *Botrytis*. Practice good sanitation and ventilation.

Peppers

Both gray mold and stem rot occur on peppers. Treatments are the same as for eggplants and tomatoes. A number of viruses also may infect peppers. The best step is prevention by elimination of sucking insects.

Cucumbers

1. *Powdery mildew*: This is the most common disease on cucumbers. Small white spots appear on the upper leaf surface (Figure 25.2). It spreads rapidly to nearby leaves and plants. Spots enlarge and spread to cover the entire leaf surface as the disease progresses. Proper sanitation and ventilation assist in preventing this disease. Elemental sulfur vaporized by a heater will create a cloud that can penetrate all areas within the crop. This is generally done

FIGURE 25.2 Powdery mildew on cucumber.

overnight. The best remedy for this disease is the selection of resistant or highly tolerant varieties such as Dominica, Logica, and Marillo. Powdery mildew is especially infectious under tropical, humid conditions.

2. *Gray mold (Botrytis)*: The symptoms and controls are similar as for tomatoes.
3. *Gummy stem blight (Didymella bryoniae)*: This disease of flowers, developing fruit, petiole, and base of the main stem is expressed as tan-colored lesions. Good ventilation and optimum relative humidity will discourage infection by this fungus. Some fungicides will arrest the infection.
4. *Cucumber mosaic virus (CMV)*: Some strains of this virus also infect tomatoes. Affected leaves become dwarfed, long, and narrow. There is no cure, only prevention through sanitation and eradication of sucking insects. There are many cucumber cultivars now resistant to this virus. They are indicated by the code CMV after the variety name.

Lettuce

Lettuce is susceptible to several diseases including *Botrytis*, which is treated as for any of the other crops.

1. *Bacterial soft rot (Erwinia carotovora)*: This is a bacterium. It causes rotting of the internal part of the head as it forms and also at the crown of the plant. Optimum ventilation to maintain optimum humidity levels helps in abating this disease. Sanitation between crops and during production helps to minimize any infection.

2. *Lettuce big vein (Mirafiori lettuce virus)*: Symptoms are enlarged, clear veins of the leaves. Leaves become ruffled and malformed in appearance. Sanitation and resistant varieties are the means of prevention.
3. *Powdery mildew*: This disease produces the same white spots on leaves as in the case of cucumbers. Treatment is the same with vaporized elemental sulfur. Removal of the crop followed by strict sanitation is obligatory. Use resistant varieties.

Herbs

Some herbs are particularly susceptible to Powdery Mildew and *Botrytis.* Basil is affected by bacterial soft rot, especially after harvesting when packaged. *Fusarium* root rot in basil can be avoided through the use of resistant varieties such as "Aroma 2" and "Nufar." Fungal and bacterial leaf spots may occur, especially under high relative humidity or excessive moistening of leaves. Follow control measures as outlined earlier for the other crops.

COMMON PESTS

Most of the pests such as aphids, larvae of caterpillars and moths, mealybugs, two-spotted spider mites, thrips, and whiteflies infest all of the crops. However, some are more aggressive on certain crops than others. They are listed in order of importance under each crop. For details on the identification, life cycles, and control measures refer to websites and books listed in the Appendix such as my book *Hydroponic Food Production*.

Place yellow sticky traps on the overhead wires or support strings about a foot above the top of the plant to catch and monitor the presence of these pests.

Tomatoes

1. *Whiteflies*: This is the most troublesome pest associated with tomatoes (Figure 25.3). You can easily identify this insect by its white wings and body. It is most prevalent on the undersides of leaves and flies quickly when disturbed. There are beneficial insects as well as pesticides available for their control. All of those details you can get at various websites listed in the Appendix.
2. *Aphids*: These pests are almost always found in your backyard garden. They are green, brown, or black in color depending upon the species. Their distinguishing pear-shaped body places them apart from other insects (Figure 25.4). There are winged and wingless forms. One prominent characteristic of their infestation on plants is the presence of "honeydew" excreted from their abdomens causing stickiness of leaves and plant parts as they suck on the plants. This liquid attracts ants, so if you encounter large ant populations around the plants it could be due to the presence of aphids. Often sooty molds (fungi) infect the leaves as a secondary organism, creating a black film on the leaves.

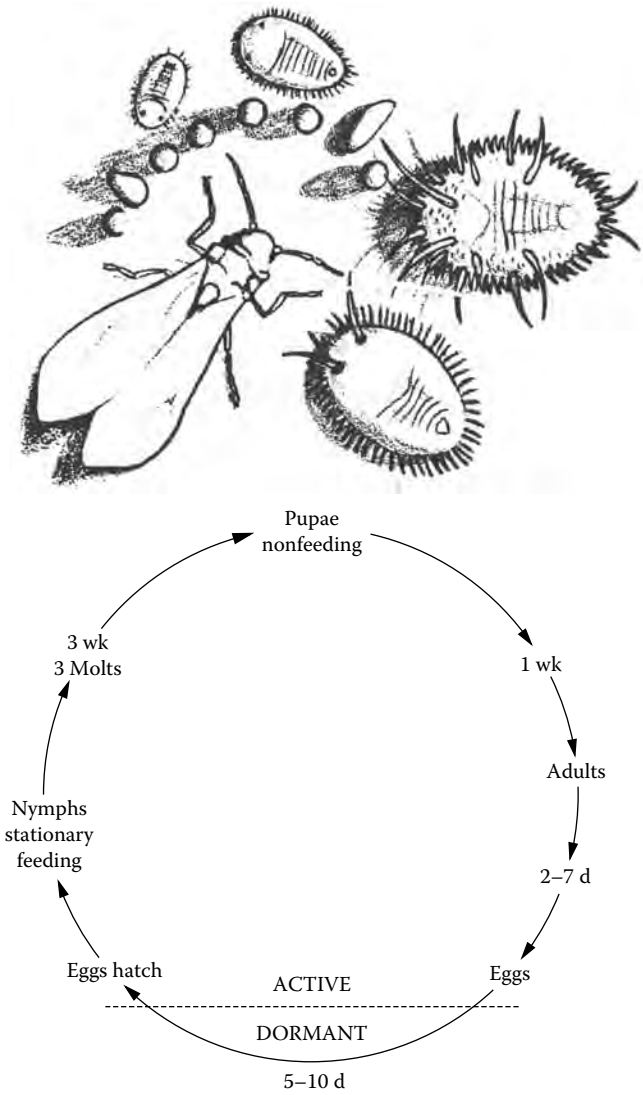

FIGURE 25.3 Whiteflies with life cycle. (Insect drawings courtesy of J.R. Baker, North Carolina Agricultural Extension Service, Raleigh, North Carolina.)

3. *Two-spotted spider mite*: Mites are related to spiders and ticks. They have four pairs of legs compared to insects that have only three pairs of legs. They have two dark-colored spots on their bodies that differentiate them from other mites (Figure 25.5). As they suck on the leaves, small yellow spots form that eventually coalesce to give a bronze appearance to the leaves. They also produce webbing on the leaf surface as infestation increases. If not controlled when numbers are manageable, they will cause complete bleaching and death of the leaves as they suck out all the contents of the cells.

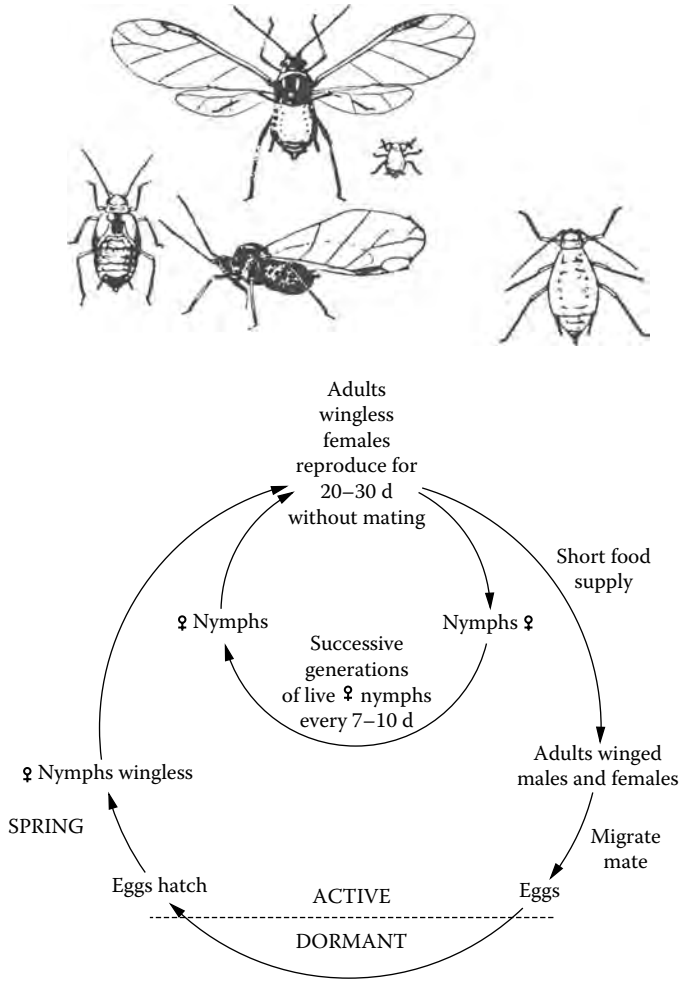

FIGURE 25.4 Aphids with life cycle. (Insect drawings courtesy of J.R. Baker, North Carolina Agricultural Extension Service, Raleigh, North Carolina.)

Several other mites exist that also damage greenhouse crops, carmine mites, and broad mites. These, however, are not as prevalent as the two-spotted mite. They lack the two dark spots and differ in color. The carmine mite is bright red, while the broad mite is translucent and can only be seen with a hand lens. Broad mites cause leaf and fruit deformation.

4. *Thrips*: These insects are especially attracted to the flowers. Their distinct feature is the presence of feathery wings (Figure 25.6). They have rasping mouthparts that scrape the leaf surface and suck the plant sap, causing white, silvery streaks on the leaves. They, like whiteflies and aphids, also carry viruses. Thrips are more attracted to blue sticky traps.

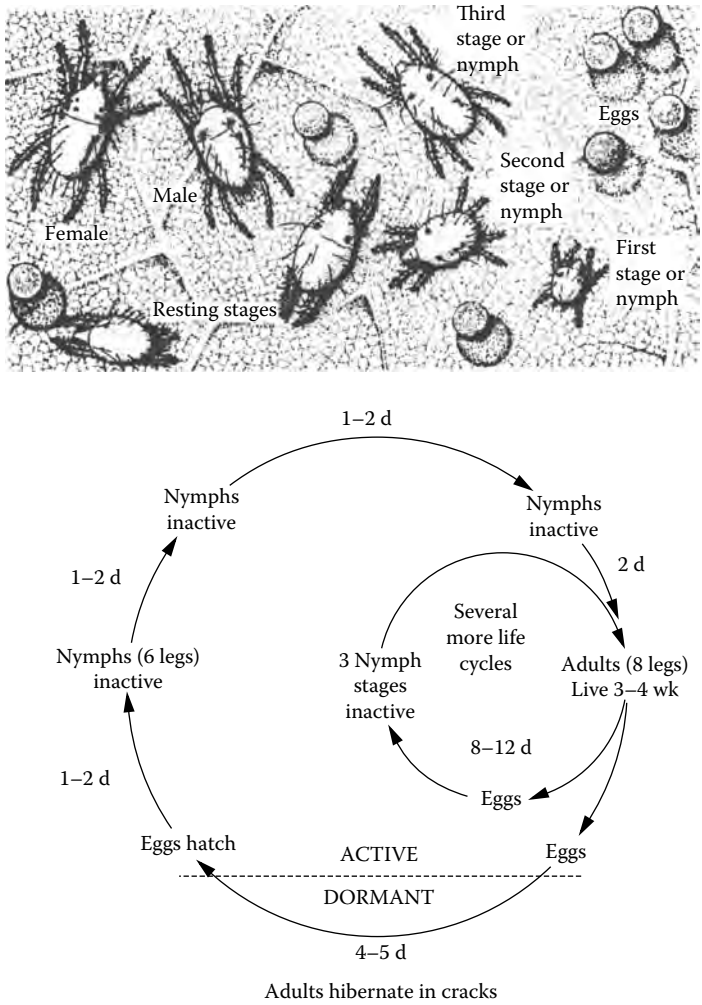

FIGURE 25.5 Two-spotted spider mites with life cycle. (Insect drawings courtesy of J.R. Baker, North Carolina Agricultural Extension Service, Raleigh, North Carolina.)

5. *Leafminers*: Adult leafminers are flies yellow-black in color (Figure 25.7). They deposit eggs in the leaves that show as white swellings. As the larvae hatch, they eat "tunnels" through the leaf between the upper and lower leaf epidermis, creating "mines." As infestation increases, the mines coalesce resulting in large areas of damage that eventually lead to the death of the leaf. The mature larvae drop to the ground (surface of the substrate) where they pupate (go through metamorphosis to adults) within 10 days. The cycle begins all over again.

   Reduce infestations by the removal of badly infected leaves and clean up any fallen leaves from the floor. If the substrate is covered with white

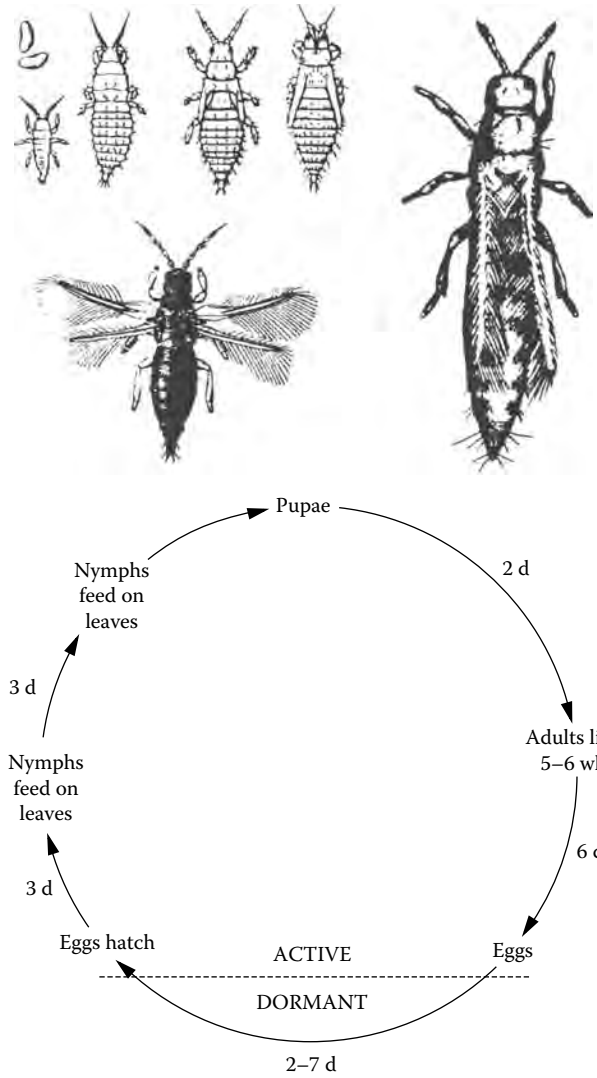

FIGURE 25.6 Thrips with life cycle. (Insect drawings courtesy of J.R. Baker, North Carolina Agricultural Extension Service, Raleigh, North Carolina.)

polyethylene to prevent the larvae from entering as they fall from the leaves, it will minimize the reproduction of the insects. This is particularly helpful if your plants are growing in pots or beds. The use of plastic wrapped slabs will restrict the infestation by breaking the life cycle.

6. *Caterpillars and cutworms*: These are larvae of butterflies and moths, respectively (Figure 25.8). Their presence on crops is indicated by notches in leaves and cut stems and leaf petioles. Cutworms climb up the plants and feed at night, going back to the substrate to hide during the day. Caterpillars feed day

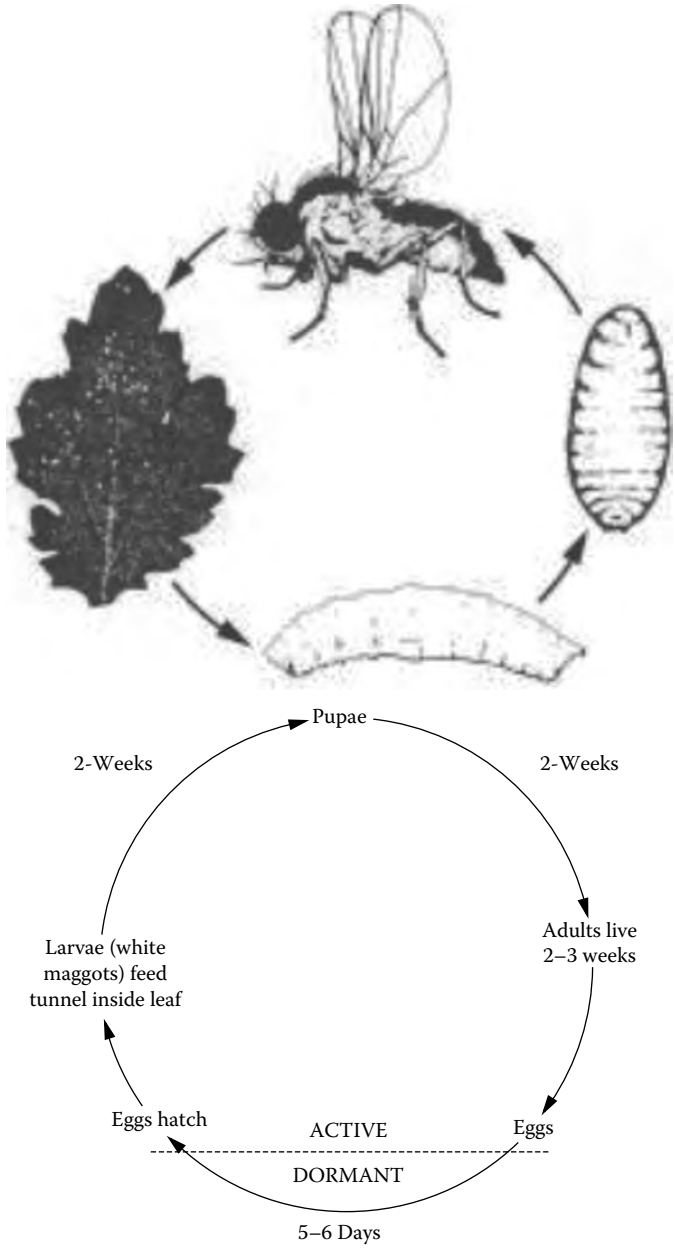

FIGURE 25.7 Leafminers with "tunnels" in leaves and life cycle. (Insect drawings courtesy of J.R. Baker, North Carolina Agricultural Extension Service, Raleigh, North Carolina.)

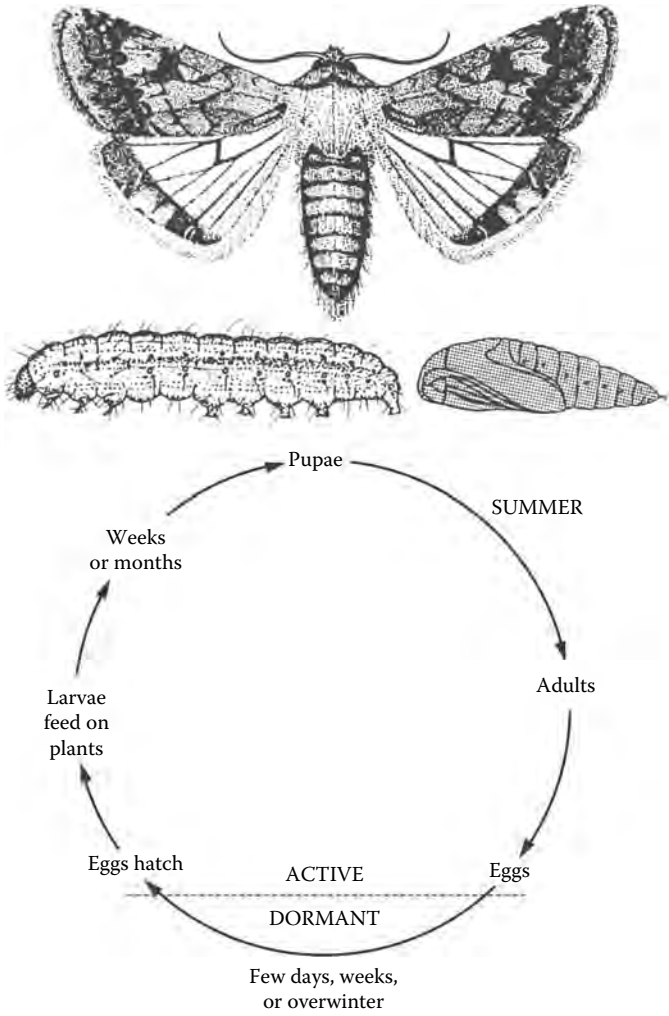

FIGURE 25.8 Caterpillars with life cycle. (Insect drawings courtesy of J.R. Baker, North Carolina Agricultural Extension Service, Raleigh, North Carolina.)

and night. Another tell-tale sign of their presence is the excrements on leaves where they are feeding. Some hornworms can kill an entire plant in one day or night. Look for their signs and pick them off by hand. Also, control them by spraying Dipel or Xentari weekly. Dipel and Xentari are a bacterium (*Bacillus thuringiensis)*. This product is very safe and is a biological control agent.

Eggplants

1. *Whiteflies*: These are very common on eggplants. Treatment is as for tomatoes.

2. *Aphids*: The same types of aphids and their control as for tomatoes applies.
3. *Two-spotted spider mite*: Once again their control is the same as for tomatoes.
4. *Mealybugs*: These are notorious on peppers, eggplants, and basil. They have a very characteristic appearance of forming a white wax-like substance covering their bodies (Figure 25.9). It is powder filaments and projections or plates. These filaments protect the insect from contact with many sprays. When using a spray, add a sticker to breakdown the surface tension of the filaments so that the pesticide can contact the insect. There are a few beneficial insects that prey on the pests.
5. *Caterpillars and cutworms*: Look for the same signs as for tomatoes and control them in the same manner.

FIGURE 25.9 Mealybugs on pepper stem.

Peppers

1. *Mealybugs*: The worst enemy of peppers and the most difficult to control is the mealybug (Figure 25.9). Peppers are also susceptible to whiteflies, aphids, thrips, mites, caterpillars, and cutworms in that order of importance. But these are all easier to control than the mealybugs. Mealybugs cause secretion on the leaves and fruit as they suck the juices from the plants. This sticky substance attracts ants and initiates secondary fungus infection such as sooty mold.

   Control mealybugs as soon as they are sighted at an early stage before they form their protective waxy coating. At this early stage use natural pesticides such as M-Pede, Azatin, and BotaniGard. Infestation progresses very rapidly and will cause leaves to senesce (turn yellow), die, and fall. Remove any heavily infested leaves and bury them.
2. *Broad mites*: Broad mites are translucent and much smaller than the carmine or two-spotted spider mite. The first signs of damage are the curling of young leaves and their becoming brittle. Soon after the initial plant responds, the broad mites will kill the growing point of the plants (Figure 25.10). Once the growing points are damaged to the extent that they dry and break off, the plants are lost as they do not easily form new side shoots. Broad mites also cause scarring of fruit and its deformation. The fruit is not useable at that stage of symptom development.

   Fortunately, they can be controlled by use of Azatin, Neemix, and Abamectin. There are also a number of predatory mites that keep the broad mites in check.
3. *Thrips*: These are more common in peppers than in tomatoes or eggplants. Again monitor them with the sticky cards and control them with natural pesticides and beneficial insects.
4. *Caterpillars and cutworms*: These not only chew holes in the leaves, but also may cut through the stems and eat their way into the fruit at the stem end and then devour the fruit from the inside until it falls from the vines.

Cucumbers

1. *Mites*: All three of the mites mentioned earlier love to feed on cucumbers. The two-spotted red spider mite is most common, but carmine and broad mites also attack cucumbers. Broad mites cause the death of the growing point and damage fruit with the appearance of many small white spots that also cause deformation of the fruit. However, malformation is not as severe as with the fruit of peppers. Both beneficial predatory mites and some midges feed on these pests.

   Mites are probably the worst pest of strawberries causing damage on the fruit and leaves with webbing as the infestation progresses.
2. *Whiteflies*: Always check the undersides of leaves as that is generally where infestation begins. Control is as for tomatoes and other crops.
3. *Mealybugs*: Mealybugs probably prefer peppers, eggplants, basil, cucumbers, and tomatoes in that order. At least I have found that in my experience over the years!

FIGURE 25.10 Broad mite damage on peppers.

4. *Aphids*: All types of aphids infest cucumbers.
5. *Thrips*: They are common in cucumbers damaging leaves and fruit.
6. *Caterpillars and cutworms*: These seem to be less of an issue with cucumbers compared to other crops, perhaps due to the rough leaves of the cucumber.

Lettuce and Arugula

1. *Whiteflies*: These are harsh on lettuce and arugula. Early control is the best approach with beneficial insects and natural chemicals.
2. *Thrips*: Thrips cause severe damage to the leaves scarring the tissue with their rasping mouthparts. The symptoms include the bronzing or silvery streaks on the leaves and stunting of the plants as thrips suck on the young growing point. Thrips prefer flowers or young growing tips of the plants where they hide. When applying pesticides, add a tablespoon of brown sugar per gallon of the tank mixture to bring the thrips out of their hiding places in the tips and in flowers so that a contact pesticide will reach them.

3. *Leafminers*: These can be terrible with lettuce causing loss of leaves and stunting of the plants. Follow the steps outlined earlier for control.
4. *Caterpillars and cutworms*: The best cure here is weekly application of Dipel or Xentari to keep small larvae under control.
5. *Aphids*: All types of aphids will infest lettuce and arugula. Arugula is less troubled by these pests than lettuce, which is more succulent.

Herbs

Most herbs are fairly resistant to many pests. Whiteflies, aphids, mealybugs, and mites prefer basil, thyme, chervil, and chives. Just be vigilant with all of these crops, identify the pests early and treat them as soon as detected. That will make their control much easier with less damage to the plants.

Bok Choy

The principle pests of bok choy are caterpillars, cutworms, aphids, whiteflies, and leafminers. Spray the bok choy once a week with Dipel or Xentari to prevent the cutworms and caterpillars.

Seedlings

All seedlings when growing in close proximity in cubes are particularly susceptible to fungus gnats especially when a nutrient solution is applied causing algae to grow on the surface of the cubes. Fungus gnats need moisture to deposit their eggs on the surface of the cubes. Larva hatch to grow as a white worm, about ¼″ long, with a black head. The larvae feed on decaying organic matter and algae, but soon attack the seedlings feeding on their roots. Adults have long legs and antennae with one pair of clear wings (Figure 25.11).

Control them by keeping surfaces dry in aisles, and so on of the greenhouse and applying "Vectobac" or "Gnatrol" once a week by soaking the seedlings. Both of these agents are subspecies of the bacterium *Bacillus*. There is a natural nematode (small microscopic eelworm) predator, trade name "Entonem," that is mixed with water and applied as a drench or spray. There is also a predatory mite that feeds on fungus gnat eggs and larvae.

INTEGRATED PEST MANAGEMENT

Integrated pest management (IPM) is the use of beneficial insects, supported with natural pesticides (bioagents) to control pests in the greenhouse. It is a natural balance of pests and beneficial insects keeping the pest population at manageable levels so that very limited plant damage occurs from their presence. It is not to eliminate the pests entirely as that would exclude the beneficial insects from obtaining adequate food to maintain their existence. Beneficial insects may be predators in which they eat their prey (pests) or they may be parasites to the prey by depositing eggs in the prey and as those eggs hatch they actually destroy the pests from the inside using

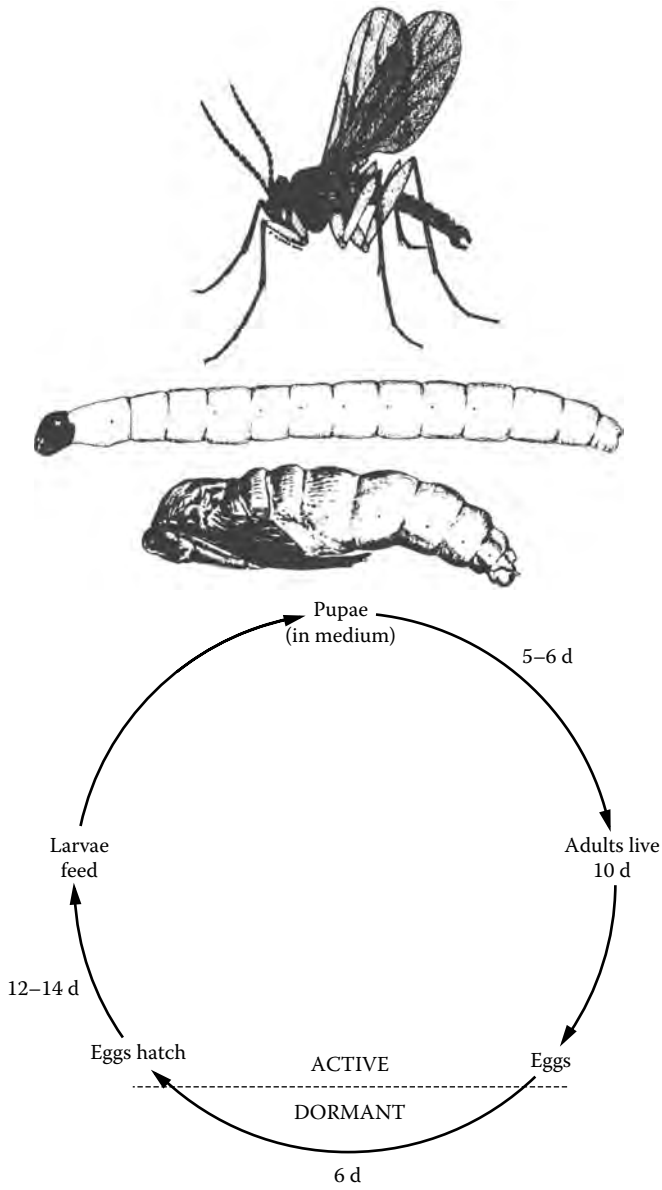

FIGURE 25.11 Fungus gnats with life cycle. (Insect drawings courtesy of J.R. Baker, North Carolina Agricultural Extension Service, Raleigh, North Carolina.)

them as their food source. They are really ferocious and aggressive insects that cause the death of many pests, but always maintaining some balance in retaining sufficient numbers of pests to feed them and their next generations as the cycle repeats.

These beneficial insects are specific to specific pests. Biological supply houses, such as Koppert, rear the beneficial insects and sell them to greenhouse operators. The

suppliers of beneficial insects also provide information on monitoring the progress of the beneficials and the control of the pest population. Refer to the Appendix for websites of numerous suppliers of beneficial insects. In most cases, hobby hydroponic growers may use IPM with the assistance of local hydroponic shops or online where these beneficials are available. The key to success is the proper identification of the pest and then obtaining specific beneficial insects to control that pest. Monitoring of the pest population at least several times a week using sticky cards to attract the pests give a representative sample of the numbers and whether or not the population is increasing or remaining stable by the assistance of the beneficials. This monitoring and balancing of both pest and prey is the basis of successful IPM. It is a little more complex method of controlling pests, but is all natural without the use of synthetic pesticides. You may use at times natural pesticide (bioagent) sprays to reduce outbreaks in pest populations to assist the predators in gaining control. However, it is important that these bioagents are not detrimental to the beneficial insects. Information on the compatibility of the bioagents with the beneficials is available on various websites.

SPRAYING

When applying pesticides with a sprayer, choose the correct equipment to match the size of your hydroponic system to make the task easier. In most cases, a backpack sprayer, such as the "Solo" sprayer that has a capacity of 3 gallons, is more than adequate for indoor and backyard operations. It comes with an adjustable nozzle to disperse the spray from a stream to a fine mist. Mix the pesticide with water according to the rate directions exactly as given on the label. Spray during the early morning before temperatures rise and if in a backyard greenhouse before the sunlight

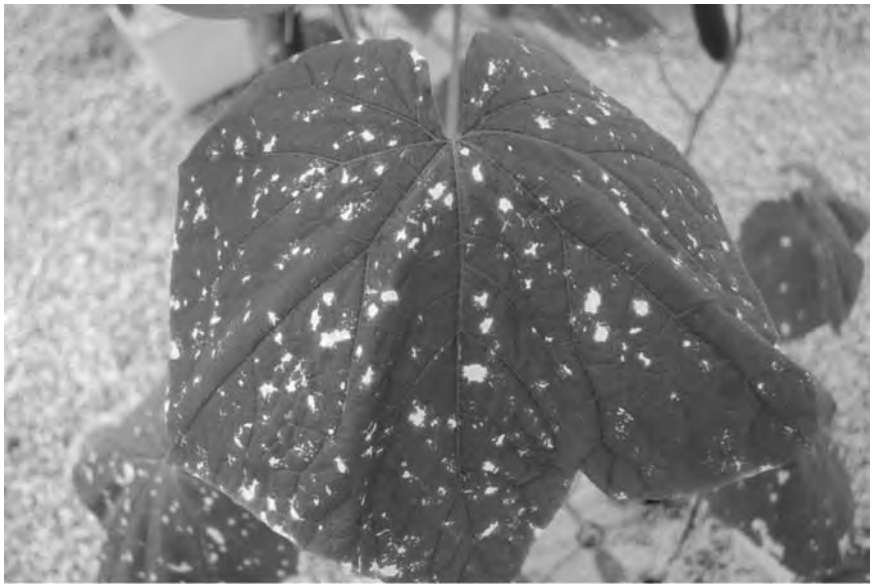

FIGURE 25.12 Burn on a cucumber leaf from a pesticide.

becomes intense, as high temperatures and light can cause burn on the plant leaves. Burn appears as a white clearing of the leaf tissue as shown in Figure 25.12. After spraying you must clean the sprayer thoroughly using soap and water to prevent any residual carry over to your next use, especially when applying numerous different pesticides with the same sprayer. This applies to all pesticides whether natural or synthetic.

SUMMARY

Keep pests and diseases under control in the surrounding area of a backyard greenhouse. If you are also growing in a backyard garden in traditional soil during the spring and summer, this applies to those crops as well. Sanitation in and around the hydroponic system as mentioned earlier is a good practice to reduce pests and diseases. Finally, keep your plants healthy through providing them with optimum nutrition and environment. Healthy plants have thick cuticles and strong tissues that will discourage pests and especially reduce diseases. Avoid rapid vegetative, succulent growth of the plants that causes weak growth and thin tissues that are susceptible to disease infection.

While there are many pests that can damage your crops, their entrance to your crop is more limited indoors than outside in a backyard garden. Nonetheless, once a few enter they will quickly multiply in the ideal environment of your crops. Seek information on many of the helpful websites listed in the Appendix to identify and quickly control the pests. The great advantage of growing indoors or in a greenhouse is that you can introduce natural biological agents that are predators or parasites of the pests and they will live happily in the environment surrounding the crops keeping the pest population in balance. In your backyard garden, this containment of natural agents is difficult, if not impossible, so you must rely more on pesticides. Use natural pesticides (bioagents), whenever appropriate instead of synthetic ones that are persistent in the plants and environment. With hydroponics, the growing area is initially free of all pests and diseases, but as the crop develops, the entrance of such organisms may occur damaging the aerial part of the plants. Watch for them, monitor the area with sticky cards, and act quickly to control them when you encounter them. That will make your growing more productive and enjoyable!

Section VII

Sprouts and Microgreens

26 Sprouts versus Microgreens

SPROUTS

Sprouts and microgreens are very unique crops both in their use and growing. They are used in sandwiches, salads, garnishes, and cooking. Mung bean sprouts are popular in cooking, especially in Chinese and oriental cuisine.

Sprouts of alfalfa, beans, radish, broccoli, and mixtures of alfalfa with onions, garlic, clover, cabbage, fennel, fenugreek, kale, leek, lentil, mustard, cow peas, and green peas are popular nowadays. Many are blended with alfalfa, which makes up 60%–80% of the mix. The seeds of these plants are raw and untreated, and hence the sterilization of their surface is imperative to prevent any possible presence of human transmitted diseases like *Escherichia coli* and *Salmonella*. Purchase the seeds from a reliable source that screens them for the presence of these diseases. For example, Johnny's Selected Seeds are tested to be negative for the presence of these diseases and certified "organic." They also offer a "sprout mix" that contains broccoli, China Rose radish, alfalfa, and Red Russian kale. They describe this mix as "Various shades of green leaves and pink and white stems with a crisp mildly spicy flavor."

If you wish to grow sprouts, it is easiest to purchase a small kitchen unit such as that offered by Johnny's Selected Seeds. They have a "Bioset Germinator" that is specifically designed for germinating seeds. It has a unique siphon action that controls moisture and humidity throughout and is arranged in three layers to separate different crops. It measures about 8″ tall by 6″ in diameter and sells at a cost of $22. They also offer germination kits that are five bags of sprout seeds to fit the germinator.

As mentioned earlier, it is important to sterilize all seeds that will be grown for sprouts and microgreens. Sterilize with about 4000 ppm active chlorine. Use a 10% bleach solution soaking the seeds for about 5–10 min. For example, "Clorox" it has 5.25% active ingredient of sodium hypochlorite. A 10% solution, therefore, will contain 5250 ppm of sodium hypochlorite (1% = 10,000 ppm; so dilution to 10% is 10% × 5.25% × 10,000 ppm = 5250 ppm). This concentration is good for hard seed coats such as those of alfalfa and Mung beans. For microgreens sterilize seeds having softer seed coats, such as amaranth and lettuce, for 4–5 min. Simply watch the bleach solution as you swirl the seeds around in a glass. If the solution starts to become brown, it indicates that the seed coats are starting to break down. At that point the sterilization process is adequate. If you continue longer, there is a risk that the chlorine solution will damage the seed.

Rinse the seeds with raw water several times and place them in the growing containers. Cleanliness is of the highest priority to prevent infection by fungi and bacteria. Use disposable gloves when spreading the seeds.

Both sprouts and microgreens are grown in your home, so temperatures and humidity levels are fine. You may grow them on the kitchen counter or in a bay window. Sprouts do not require any set amount of light, but microgreens should have 14 hours of light of similar intensity to other crops. However, you may use several 30-watt compact fluorescent lights suspended about a foot above the trays to meet their needs. That is much easier than the lighting used with your hydroponic garden. Even though sprouts and microgreens are not thought of as hydroponic, they really are. For that reason, I wish to present their growing methods.

MICROGREENS

Because microgreens are grown under light, they are more nutritious than sprouts. They are generally grown only to their cotyledon stage or slightly longer with the first appearance of true leaves (Figure 26.1). Microgreens grow in the presence of light permitting photosynthesis to occur and the development of chlorophyll (green) and Anthocyanin (purple) pigments. This pigment formation gives the microgreens added nutrients compared to sprouts. Anthocyanin pigment is high in iron content. The other difference between sprouts and microgreens is that with sprouts you eat the shoots and seeds, whereas with microgreens you simply cut off the shoots above the growing substrate leaving the seeds and seed coats behind. This is an added

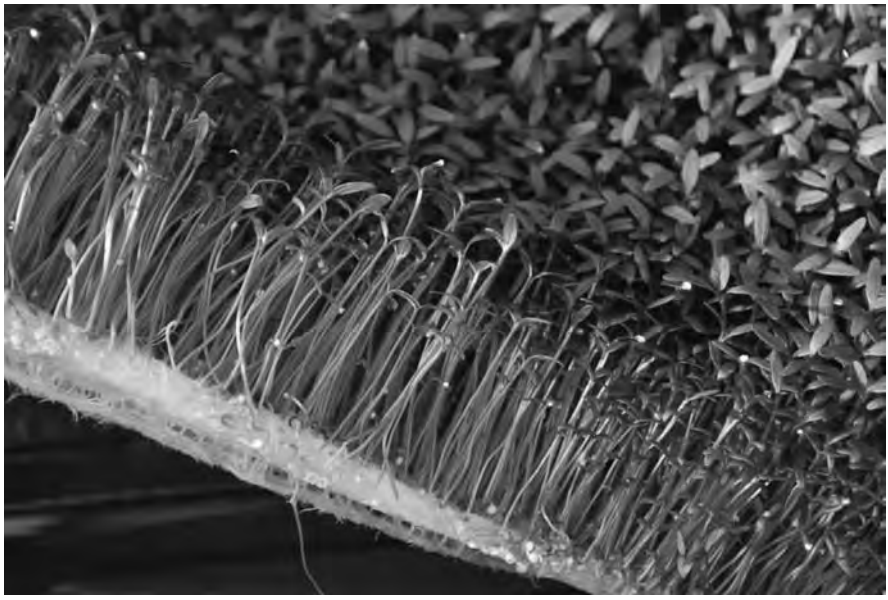

FIGURE 26.1 Amaranth microgreens. (Courtesy of CuisinArt Golf Resort and Spa, Anguilla.)

TABLE 26.1
Potential Microgreen Crops

Amaranth-red	Fennel
Arugula	Kale
Asian greens	Kohlrabi-purple
Basils-Italian, Lemon, Opal	Mint
Beets	Mizuna
Broccoli	Mustard-red
Cabbage	Nasturtium
Celery	Onion
Chives	Parsley
Chervil	Radish-Daikon, red
Cilantro	Spinach
Collards	Sweet pea
Cress-Pepper Cress, Watercress	Swiss chard
Dill	

safety factor in avoiding any illness as the human sicknesses attributed to sprouts are mainly located on the seed coats if not sterilized sufficiently.

Microgreens are very easy to grow and give prolific production. They take a little longer to harvest stage than sprouts, which take 4–5 days. Some radish microgreens will be ready within 5–6 days, but most other crops take up to several weeks. Therefore, when combining different crops of microgreens, you should be aware of the cropping cycles in order to mix those of similar growing periods. In catalogs of microgreen seed providers, the seed varieties are classified into the categories of fast and slow growing. This assists you in the choice of crops to mix within one tray so that they mature at similar times. Seed companies such as Johnny's Selected Seeds also offer several micro mixes as a mild or spicy mixture with varieties that grow well together and give a unique flavor.

Some of the fast-growing varieties include cresses, Chinese cabbage, mustards, Mizuna, radish (Daikon, Hong Vit, and Red Rambo), Pac Choi, Red Russian kale, purple kohlrabi, and Tatsoi. Slow-growing varieties include arugula, beets, sorrel, chard, Komatsuna scallions, Red Garnet Amaranth, basils, orach, and Red Giant mustard. A summary of the most popular microgreens is given in Table 26.1. Try other crops as well. A little experimentation can result in discovering a very appealing crop!

Asian greens include Mitsuba, Pak Choi, Sambuca, Shiso (green and purple), Tangerine, Tatsoi, and Wasabi.

Remember that your choice will depend upon what flavors you prefer and their culinary function. Availability of seeds, such as those of the Asian greens, may be limited. You may have to search websites of Asian seed companies. This is all part of making your hobby hydroponics interesting, unique, and rewarding!

27 Growing Techniques for Microgreens

Often people are somewhat confused as to what are the differences among sprouts, microgreens, and baby greens or mesclun mixes. These classes of products are really differentiated by their size at harvest. In terms of age and size, their categories are as follows: sprouts—youngest, grown in dark, smallest, with the presence of many seed coats; microgreens—somewhat larger in size and older (usually 2″ tall) and grown in full light; baby greens or mesclun mixes—are the oldest and largest (usually 3–4″ tall). Baby greens or mesclun mixes are also cut several times before replanting, whereas, sprouts and microgreens are a one-time harvest. Sprouts are germinated seeds and eaten in entirety (root, seed, and shoot). The edible portions of microgreens are the stems and leaves.

EQUIPMENT AND SUPPLIES

Chapter 26 presented information on sources of seeds and the types of microgreens. Use different seed catalogs and look for a section on microgreens or search websites that have information such as those listed in the Appendix.

Microgreens are easily grown for home use. I have found that the simplest system to grow them is in plastic trays. The following text lists the supplies needed to get started.

Plastic Trays

These are standard flat trays of 10½″ × 21″ used for propagation. The difference, however, is to obtain these trays without holes. They are available from garden centers and online from greenhouse suppliers such as CropKing (see Appendix). The tray acts as a reservoir to retain moisture for the growing substrate. They may be re-used between crops by sterilizing with a 10% bleach solution.

Substrate

In my experience with growing microgreens, the best medium is the "Sure To Grow" (STG) mats. These are special capillary mats made for microgreen production. Refer to the Appendix for their website. The only problem with them is that you have to purchase a case of 300 pads for about $200. An alternative is to use several layers of thick paper towels. They are not quite as good as the capillary mats but they will serve the purpose.

Seeds

As discussed in Chapter 26, these are available from some seed houses such as Johnny's Select Seeds (see Appendix). However, you may use almost any crop that you feel would suit your needs. But one note of caution: purchase only untreated or organic seeds that have no fungicide coating. The use of fungicide on many seeds is to prevent damping off disease of seedlings.

You will note their presence by the seed coat color of yellow, orange, red, green, or other unnatural color of the seed. Some seeds may only be hot-water treated, so they would be okay.

Seed Surface Sterilant

Household bleach or Clorox is adequate. As explained in Chapter 26, dilute it to 10% with water. More details of this are presented later.

Nutrients

Purchase a basic vegetable formulation from a hydroponic supplier online or at a shop (see Appendix). Dilute the nutrient solution recommended rate to half strength.

Lights

Make a stand of polyvinyl chloride (PVC) pipe to support two 30-watt compact fluorescent bulbs about 1 ft above the microgreen tray. You could use an aluminum pie plate or other reflective surface just above each light to reflect the light toward the growing tray.

Light Timer

Use an inexpensive time-clock such as ones used in homes. It should be a 24-hour clock with 1-hour intervals.

Miscellaneous

Measuring cup or graduated cylinder.
A small colander (strainer) to catch seeds as you rinse them during the sterilization procedure.
Disposable gloves to handle the seeds after sterilization.
A teaspoon (tsp) to measure, stir, and spread the seeds on the substrate in the tray.

GROWING PROCEDURES

The most popular seeds used were discussed in Chapter 26. Remember to select seed combinations within any tray that have similar growth rates. That is, avoid mixing slow-growing seeds with fast-growing ones so that your crop develops evenly and at the same pace.

Surface Sterilization

Successful growing depends upon the prevention of diseases from entering the growing tray. For that reason, I do not recommend growing microgreens outside as they will quickly become contaminated with fungi and bacteria that blow in the air with windblown dirt. The best location is on a kitchen counter or in a spare room or basement of your home.

Since you are using raw, untreated seed, the seed surface may contain bacterial or fungal spores that would quickly germinate when the seeds are placed in a moist environment in the growing tray. Surface sterilize with a 10% bleach solution (dilution of one part of bleach to nine parts of water). Make this up in a measuring cup or graduated cylinder (Figure 27.1). Pour the solution into a glass with the seeds and stir with a spoon for 4–5 min. You will have to determine the amount of seeds needed per tray to get the correct density. Be careful not to sow the seed too thick as that will cause crowding of the germinating shoots resulting in weak, elongated stems that are very susceptible to fungal infection. From my experience use 3 level tsps per tray of Amaranth, or lettuce, 2 tsps of Mizuna or Komatsuna, and 7–8 tsps of radish per tray. You will have to experiment with this density to find the best for any specific crop.

Sowing of Seeds

After the sanitation process, rinse the seeds with clean, raw water. Place the seeds in a strainer and rinse. Moisten the paper towels or capillary mat with raw water before scooping the seeds from the strainer with a spoon and spreading them evenly on the

FIGURE 27.1 Surface sterilizing seeds with 10% bleach solution. (Courtesy of CuisinArt Golf Resort and Spa, Anguilla.)

substrate in the tray. Add only sufficient water to fill the grooves in the bottom of the tray until it touches the bottom of the medium. If you fill it too much, the excess water will cause the seeds to float into clumps. You may continue to spread the seeds evenly with your finger as long as you do not touch other things. Add raw water daily for about 3 days until the seeds form small roots (radicals) and shoots (Figure 27.2). Carefully add water at one end of the tray and let it flow by capillary action through the substrate to the other end to avoid floating the seeds. Once the seeds have germinated, their initial roots (radicals) will penetrate the paper towels or mat and secure themselves. Subsequent watering and addition of nutrient solution on a daily basis may be done from above using a watering can with a sprinkler breaker spout, but still take caution in not adding too much water that may cover the seeds. The water level should always be maintained in the tray grooves to the base of the medium.

Within about 3 days when the shoots have grown about ¼–½″ in height, start using a half-strength nutrient solution. Purchase a vegetable formulation concentrate from a hydroponic shop or online and make it up to half the recommended rate per gallon. Store some solution in a dark container of several gallons. The seedlings at this time will have attached to the medium, so they will not drift as you water them. Adding too much solution at a time will inundate them causing lack of oxygen. If you add too much you can tilt the tray to let some drain off. In fact, draining the tray between watering will help to add oxygen to the root mass underneath the medium. Do not use any substrate such as a peatlite or other mix as that will cause excessive moisture levels in the tray and can also introduce substrate getting onto the microgreens during harvesting.

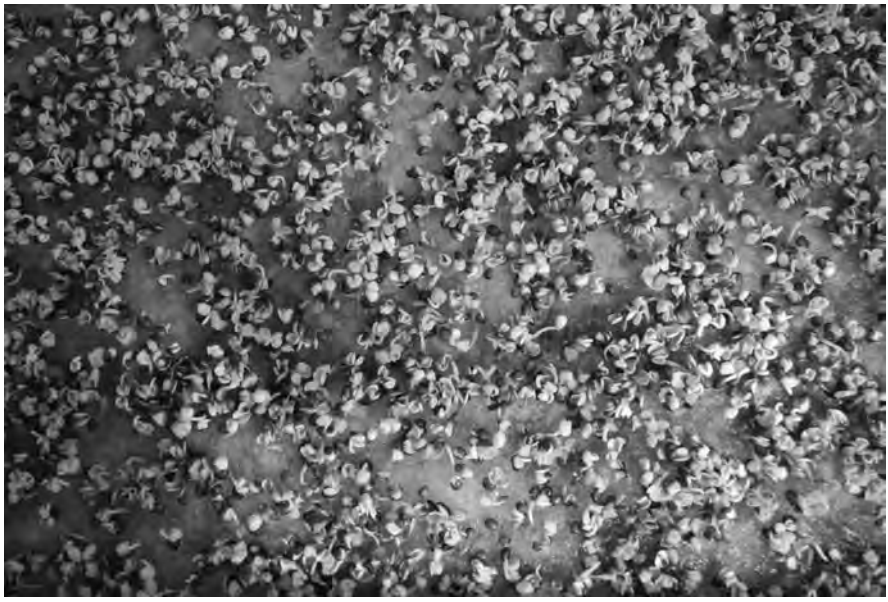

FIGURE 27.2 Radish radical and shoot development into capillary mat after 2 days. (Courtesy of CuisinArt Golf Resort and Spa, Anguilla.)

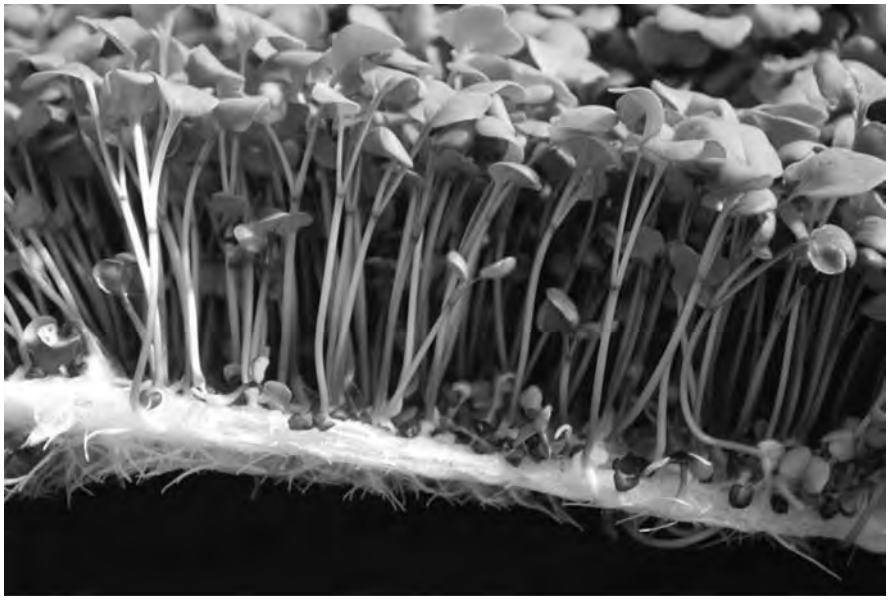

FIGURE 27.3 Radish ready to harvest after 5 days. (Courtesy of CuisinArt Golf Resort and Spa, Anguilla.)

Harvesting

Microgreens are ready for harvest when they are about 1½–2″ tall at their cotyledon stage (radish) (Figure 27.3) or the initial stage of the first true-leaf formation. Do not allow the first true leaves to expand beyond ¼″ with most varieties. Lettuce true leaves may expand a little more approaching ½″ in length. This stage may vary from 5 days with radish up to 12–14 days with slower-growing varieties such as amaranth. If you want to harvest over a few days begin a little earlier in the cropping cycle. With a scissors cut a section of the substrate with the seedlings and remove them from the tray for immediate use. Cut the seedlings just above the surface of the substrate cutting only the shoots and not the seed coats (Figure 27.4). Collect them in a bowl for use in your favorite salads or other dishes to get a nice added touch to taste and appearance!

Microgreens can be stored for a number of days in the refrigerator if you find that it is easier or that they are growing too fast to harvest daily. They are highly perishable when cut so should be washed and cooled as quickly as possible. Store them in clamshell containers that you could save when purchasing sprouts, Bibb lettuce, or other similarly packaged produce from the supermarket.

Tray Sterilization

After harvesting the microgreens, re-seed more in the same tray(s). However, you must sterilize the tray with a 10% bleach solution for about 20–30 min. Let the tray sit and dry off allowing the chlorine to dissipate before starting the next crop or rinse

FIGURE 27.4 Cutting microgreen (Amaranth) shoots with scissors. (Courtesy of CuisinArt Golf Resort and Spa, Anguilla.)

the tray with raw water. Repeat this process again as instructed earlier. Once again try different combinations of crops to find which grow best and which flavors you like. This is part of the fun of growing them! Always follow the sterilization steps precisely to avoid any contamination and you will get fantastic crops every time!

SUMMARY

You can get ideas on combinations and types of microgreens from numerous websites (see Appendix). One particularly informative website is www.freshorigins.com.

Growing microgreens, like most hydroponic crops, exemplifies plant growth and development combined with plant nutrition. This is a great theme for science projects for young, grade students. A display of growing microgreens will show the germination of plants from seeds, basic requirements of water, oxygen, and nutrients for plant growth. If the microgreens are grown a little longer, up to several weeks, nutritional studies with various nutrient levels or the deliberate non-use of the plant essential elements will be expressed in the growth differences among the trials. All of these aspects of plant growth exemplify to students the application of biology and chemistry and will attract their interest in the sciences as they see it applied. Encourage your children to get involved with you in hydroponic growing! They will better understand and appreciate that fresh produce does not just appear on supermarket shelves, and it will therefore help them comprehend the science, effort, and love for growing plants!

Final Advice on How to Get Started

Do not hesitate, anyone can grow hydroponically. In fact, if you have any indoor potted houseplants like mums, foliage ornamental plants, African violets, or any other flowering potted plants; they are all in a peatlite hydroponic substrate. That is the reason you must water them with a plant food as there are no residual nutrients in the medium apart from those given to them in the greenhouse while growing. So, with these plants you are already growing hydroponically!

Start by visiting some websites (see Appendix) such as my website: www.howardresh.com. These websites will provide lots of information and photos. Also, go to websites of hydroponic suppliers to become familiar with products, supplies, and small units (see Appendix). These websites have lots of ideas and give costs of their products. There are also many books and articles available on the Internet (see Appendix).

Once you have explored these websites decide on what size of system you wish to start with. You may begin with several pots of simple systems such as were shown in Chapter 12. Work your way up to larger units as you gain experience and confidence in various growing methods. Try different systems including wick, floating water culture, and drip irrigation of various substrates. Of course, the size of larger indoor units will be a factor of the room you have available in your home. Become familiar with environmental components as lighting, carbon dioxide enrichment, temperature regulation, and ventilation. You will employ these components as you expand a specific area isolated for hydroponic growing. A basement is an ideal environment in that it is cooler and can be secluded from the rest of the house allowing isolation of the environment in order to regulate these factors important in growing.

Begin with open systems collecting the leachate for application later to your outdoor gardening or its disposal. This will greatly simplify the nutrition of the plants initially allowing greater success until you become more experienced with the management of the nutrient solution. After several crops, modify the system to recirculation of the nutrient solution conserving water and nutrients. In this way, you will have developed the skills of maintaining and adjusting EC and pH levels with the growth of the crops.

Hydroponics is fascinating in that there are many systems of growing. Start with the simpler systems and progress to those more detailed. Broaden your knowledge with the expansion of the hydroponic facility and types of crops. Start with the easier crops like lettuce, arugula, basil, and herbs and continue later with the vine crops of tomatoes, peppers, eggplants, and European cucumbers that require specific training techniques. I am not suggesting that this is the only way to get started successfully, but recommending the route to slowly gain experience and confidence so that you

can build on these skills to prepare to grow any crop with hydroponics! It is not rocket science, it is applying your growing skills to become successful with these crops under a controlled environment that will give you maximum yields. The care of your crops in controlling many factors at optimum levels, not possible outside, will reward you with high production and quality of home-grown vegetables. These results are achieved with less labor indoors than in a traditional backyard soil garden.

If you have the space outside the next step you can take is to set up a backyard hydroponic greenhouse for year-round growing. That is another level of hydroponic growing that takes you into the regulation of the greenhouse environment through the use of your preferred structure and components to provide an optimum environment for plant growth. Greenhouse culture is a very rewarding endeavor in self-satisfaction of growing and is an escape from everyday work-related stresses. The greenhouse provides fresh, nutritious crops year round. There is nothing like arriving home from work in the dark of winter months and transforming your senses into a tropical paradise of the jungle of crops growing under bright lights! Try it!

REFERENCES

Many books on hydroponics are available from hydroponic suppliers online. Look for them at hydroponic stores, garden centers and on the Internet such as www.amazon.com and www.barnesandnoble.com.

Bridwell, R. 1990. *Hydroponic Gardening*, Rev. Ed. Woodbridge Press, Santa Barbara, CA.

Cooper, A. 1979. *The ABC of NFT*, Grower Books, London.

Dalton, L. and R. Smith. 1984. *Hydroponic Gardening*, Cobb Horwood Publications, Auckland.

Douglas, J.S. 1984. *Beginner's Guide to Hydroponics*, New Ed., Pelham Books, London.

Douglas, J.S. 1985. *Advanced Guide to Hydroponics*, New Ed., Pelham Books, London.

Harris, D. 1986. *Hydroponics: The Complete Guide to Gardening without Soil: A Practical Handbook for Beginners, Hobbyists and Commercial Growers*, New Holland Publishers, London.

Jones, J.B. Jr. 1997. *Plant Nutrition Manual*, CRC Press, Boca Raton, FL.

Jones, J.B. Jr. 1999. *Soil and Plant Analysis*, CRC Press, Boca Raton, FL.

Jones, J.B. Jr. 1999. *Soil Analysis Handbook of Reference Methods*, CRC Press, Boca Raton, FL.

Jones, J.B. Jr. 2001. *Laboratory Guide for Conducting Soil Tests and Plant Analysis*, CRC Press, Boca Raton, FL.

Jones, J.B. Jr. 2004. *Hydroponics: A Practical Guide for the Soilless Grower*, 2nd Ed., CRC Press, Boca Raton, FL.

Jones, J.B. Jr. 2007. *Tomato Plant Culture: In the Field, Greenhouse and Home Garden*, 2nd Ed., CRC Press, Boca Raton, FL.

Jones, L., P. Beardsley, and C. Beardsley. 1990. *Home Hydroponics¼ and How to Do It!*, Rev. Ed., Crown Publishers, New York, NY.

Kenyon, S. 1992. *Hydroponics for the Home Gardener*, Rev. Ed., Key Porter Books Ltd., Toronto, Canada.

Marlow, D.H. 1993. *Greenhouse Crops in North America: A Practical Guide to Stonewool Culture*, Greenhouse Gardening, Milton, Ontario, Canada.

Mason, J. 1990. *Commercial Hydroponics*, Kangaroo Press, Kenthurst, NSW, Australia.

Mason, J. 2000. *Commercial Hydroponics: How to Grow 86 Different Plants in Hydroponics*, Simon & Schuster, Australia.

Morgan, L. 1999. *Hydroponic Lettuce Production*, Casper Publications, NSW, Australia.
Morgan, L. 2005. *Fresh Culinary Herb Production*, John Wiley & Sons, Australia.
Morgan, L. 2006. *Hydroponic Strawberry Production: A Technical Guide to the Hydroponic Production of Strawberries,* Suntec (NZ) Ltd. Publications, Tokomaru, New Zealand.
Morgan, L. 2008. *Hydroponic Tomato Crop Production*, Suntec (NZ) Ltd. Publications, Tokomaru, New Zealand.
Morgan, L. and S. Lennard. 2000. *Hydroponic Capsicum Production*, Casper Publications, NSW, Australia.
Muckle, M.E. 1982. *Basic Hydroponics*, Growers Press, Princeton, BC.
Muckle, M.E. 1998. *Hydroponic NutrientsÐ Easy Ways to Make Your Own*, Rev. Ed., Growers Books, Princeton, BC.
Nelson, P.V. 1998. *Greenhouse Operation and Management*, 5th Ed., Prentice-Hall, Upper Saddle River, NJ.
Nicholls, R.E. 1990. *Beginning Hydroponics: Soilless Gardening: A Beginner's Guide to Growing Vegetables, House Plants, Flowers, and Herbs without Soil*, Running Press, Philadelphia, PA.
Pranis, E. and J. Hendry. 1995. *Exploring Classroom Hydroponics*, National Gardening Association, Inc., South Burlington, VT.
Resh, H.M. 1990. *Hydroponic Home Food Gardens*, Woodbridge Press, Santa Barbara, CA.
Resh, H.M. 1993. *Hydroponic Tomatoes for the Home Gardener*, Woodbridge Press, Santa Barbara, CA.
Resh, H.M. 1998. *Hydroponics: Questions & AnswersÐ For Successful Growing*, CRC Press, Boca Raton, FL.
Resh, H.M. 2012. *Hydroponic Food Production*, 7th Ed., CRC Press, Boca Raton, FL.
Resh, H.M. 2013. *Hobby Hydroponics*, 2nd Ed., CRC Press, Boca Raton, FL.
Roberto, K. 2003. *How-to Hydroponics*, 4th Ed., Futuregarden Press, Farmingdale, NY.
Romer, J. 2000. *Hydroponic Crop Production*, Simon & Shuster, Australia.
Ross, J. 1998. *Hydroponic Tomato Production: A Practical Guide to Growing Tomatoes in Containers*, Casper Publications, Narabeen, Australia.
Schwarz, M. 1968. *Guide to Commercial Hydroponics*, Israel University Press, Jerusalem, Israel.
Schwarz, M. 1995. *Soilless Culture Management. Advanced Series in Agriculture*, Vol. 24, Springer-Verlag, Berlin, NY.
Smith, D.L. 1987. *Rockwool in Horticulture*, Grower Books, London.
Straver, W.A. 1993. *Growing European Seedless Cucumbers*, Ministry of Agriculture and Food, Parliament Buildings, Toronto, Ontario, Canada, Factsheet, Order No. 83-006, AGDEX 292/21.
Sundstrom, A.C. 1989. *Simple HydroponicsÐ For Australian and New Zealand Gardeners*, 3rd Ed., Viking O'Neil, South Yarra, VIC, Australia.
Taylor, J.D. 1983. *Grow More Nutritious Vegetables without Soil: New Organic Method of Hydroponics*, Parkside Press, Santa Ana, CA.
Van Patten, G.F. 1990. *Gardening: The Rockwool Book*, Van Patten Publishing, Portland, OR.
Van Patten, G.F. 2004. *Hydroponic Basics*, Van Patten Publishing, Portland, OR.
Van Patten, G.F. 2007. *Gardening Indoors with Soil and Hydroponics*, 5th Ed., Van Patten Publishing, Portland, OR.

Appendix: Sources of Supplies and Information

WEBSITES

Hobby Hydroponic Growing

There are many websites with useful information on hydroponic culture of various crops. Use search engines such as Google for these websites under "Simple or Hobby Hydroponics." Here are a few to get started.

http://hydroponics123123.multiply.com/journal/item/5
http://hydroponics123123.multiply.com/journal/item/6
http://hydroponics123123.multiply.com/journal/item/9
http://hydroponics123123.multiply.com/journal/item/10
http://www.hydro-unlimited.com/index.php?p=2_1
http://www.simplyhydro.com/freesys.htm
http://www.hydroponics-simplified.com/hydroponic-setups.html
http://www.homehydrosystems.com/hydroponic-systems/systems.html
http://www.hydroponicsequipment.co
http://www.aces.edu/pubs/docs/A/ANR-1151/index2.tmpl
http://www.squidoo.com/backyardhobbygreenhouses

Hobby Hydroponic Supplies

There are many suppliers of hydroponic nutrients, equipment and accessories. Here are a few available through the Internet.

Company	Website
Advanced Nutrients	www.advancednutrients.com
AeroGarden	www.aerogarden.com
American Hydroponics	www.amhydro.com
Apache Tech Inc.	www.apachetechinc.com
Aquatic Eco-Systems, Inc.	www.AquaticEco.com
Autogrow Systems Ltd.	www.autogrow.com
AutoPot	www.autopot.co.uk
Better Grow Hydroponics	www.bghydro.com
Bluelab Corporation Limited	www.getbluelab.com
Botanicare (American Agritech)	www.botanicare.com www.americanagritech.com
CO2Boost	www.co2boost.com

CropKing, Inc.	www.cropking.com
Current Culture H2O	www.cch2o.com
General Hydroponics	www.generalhydroponics.com
Greentrees Hydroponics	www.hydroponics.net
Grodan	www.grodan101.com
Growco Garden Supply	www.4hydroponics.com
Hanna Instruments	www.hannainst.com
Homegrown Hydroponics	www.homegrownhydro.com
Horti-Control	www.horticontrol.com
HTG Supply	www.htgsupply.com
Hydrodynamics International, Inc.	www.hydrodynamicsintl.com
Hydrofarm Horticultural Products	www.hydrofarm.com
Hydrofogger	www.hydrofogger.com
Hydrologic Purifications Systems	www.hydrologicsystems.com
Hydrotek	www.hydrotek.ca
Milwaukee Instruments	www.milwaukeeinstruments.com
Myron L Company	www.myronl.com
Nickel City Wholesale Garden Supply	www.ncwgs.com
North American Hydroponics	www.wearehydro.com
P.L. Light Systems	www.pllight.com
Pulse Instruments	www.pulseinstrument.com
Simply Hydroponics and Organics	www.simplyhydro.com
Solis Tek Digital Ballasts	www.solis-tek.com
Sunburst Hydroponics	www.4hydro.com
Sunleaves Garden Products	www.sunleaves.com
Sunlight Supply, Inc.	www.sunlightsupply.com
Sure To Grow	www.suretogrow.com
Verti-Gro, Inc.	www.vertigro.com

Backyard Greenhouses and Components

The following companies and websites offer structures, components, and information on backyard greenhouses.

Company	Website
ACF Greenhouses	www.littlegreenhouse.com
Acme Engineering and	www.acmeag.com
Manufacturing Corp.	www.acmehort.com/products.asp
Backyard Greenhouses	www.backyardgreenhouses.com
BC Greenhouse Builders Ltd.	www.bcgreenhouses.com
Gothic Arch Greenhouses	www.gothicarchgreenhouses.com
Grainger, Inc.	www.grainger.com
Intermatic, Inc.	www.intermatic.com
International Greenhouse Company	www.igcusa.com
	www.greenhousemegastore.com

J. Orbesen Teknik ApS.	www.greenhouse-vent-opener.com
Mardenkro	www.mardenkro.com
Modine Manufacturing Co.	www.modine.com
Sherry's Greenhouse	www.sherrysgreenhouse.com/oldsite/GHcontents.html
The Greenhouse Catalog	www.greenhousecatalog.com
Thermoforce Ltd.	www.thermoforce.co.uk/autovents.htm

Hydroponic Information—Government and Universities—Websites

www.aceis.agr.ca
www.ag.arizona.edu/hydroponictomatoes
www.colostate.edu/Dept/CoopExt/Adams/gh/pdf/dbghobby.pdf
www.cals.cornell.edu/dept/flori/cea/programs.html
www.greenhouseinfo.com
www.usda.gov
www.ontariogreenhouse.com
www.agf.gov.bc.ca/croplive/cropprot/prodguide.html
www.bcgreenhouse.ca/publications.htm
www.ces.ncsu.edu
www.ipm.ucdavis.edu
www.msucares.com/pubs/

Pests and Diseases—Websites of Identification and Control—IPM

www.koppert.nl
www.anbp.org
www.intertechserv.com
www.biobest.be
www.mycotech.com
www.bioworksbiocontrol.com
www.biocontrol.entomology.cornell.edu/
www.ipm.ucdavis.edu/
www.res2.agr.ca/harrow/bkindex.htm
www.cips.msu.edu/biocontrol/research.htm
www.nysipm.cornell.edu/publications/greymold.html
http://207.5.71.37/biobest/en/teelten/tomaat.htm
www.naturescontrol.com/controls.html

Sources of Seeds

Seed Houses	Website
De Ruiter Seeds Inc.	www.deruiterusa.com
(Monsanto Vegetable Seeds)	www.monsanto.com

Johnny's Selected Seeds	www.johnnyseeds.com
Ornamental Edibles	www.ornamentaledibles.com
Paramount Seeds Inc.	www.paramountseeds.com
Richters Herbs	www.richters.com
Stokes Seeds Ltd.	www.stokeseeds.com
Rijk Zwaan USA	www.rijkzwaan.nl
Tainong Seeds, Inc.	www.tainongseeds.com

Hydroponic Organizations

Hydroponic societies promote new technology and products. They hold annual meetings or conferences providing up-to-date information from experts within the field of hydroponics. The meetings are very informative introducing new techniques and products. In addition, you will meet people who have been inspired by hydroponics. Most conferences have a Hydroponic Suppliers' Trade show displaying products offered by companies.

Addresses and Websites/E-mails for Hydroponic Societies

Address	Website/E-mail
Hydroponic Society of America (HSA) P.O. Box 1183 El Cerrito, CA 94530	www.lisarein.com/hydroponics
Asociacion Hidroponica Mexicana A.C.	www.hidroponia.org.mx
Australian Hydroponic and Greenhouse Association (AHGA) (renamed: Protected Cropping Australia) (PCA) Narrabeen, NSW, 2101, Australia	www.protectedcroppingaustralia.com
Centro de Investigacion de Hidroponia y Nutricion Mineral Univ. Nacional Agraria La Molina Av. La Universidad s/n La Molina Lima 12, Peru	www.lamolina.edu.pe/hidroponia
Centro Nacional de Jardineria Corazon Verde in Costa Rica	www.corazonverdecr.com
Encontro Brasileiro de Hidroponia	www.encontrohidroponia.com.br
Singapore Society for Soilless Culture (SSSC) #13-75, 461 Crawford Lane, Singapore 190461	

Internet Chat Clubs

There are hydroponic forums where you may sign up to be part of discussion groups online. You can seek advice from other growers and hydroponic experts. Such forums disperse knowledge of new products.

Of course, you can share your experiences with others on websites like YouTube, Facebook and Twitter, and so on.

Websites/E-mails of Hydroponic Forums

hydroforum@fesersoft.com
hydrolist@hydropoinics.org
http://forums.gardenweb.com/forums/hydro/
www.hydrohangout.com
www.hobbyhydro.com

Hydroponic Magazines

While these magazines present both poplar and technical articles, they are written for ease of understanding. The magazines have extensive advertising by manufacturers and suppliers of hydroponic products to keep you informed of new products.

Addresses and Websites of Hydroponic Magazines

Practical Hydroponics and Greenhouses Casper Publications Pty Ltd. P.O. Box 225 Narrabeen, 2101 Australia	www.hydroponics.com.au
The Growing Edge Magazine P.O. Box 1027 Corvallis, OR 97339	www.growingedge.com
Maximum Yield Gardening 2339 Delinea Place Nanaimo, BC Canada V9T 5L9	www.maximumyield.com
National Gardening Association 1100 Dorset Street South Burlington, VT 05403	http://assoc.garden.org
The Indoor Gardener Magazine Green Publications P.O. Box 52046 Laval, Quebec Canada H7P 5S1	www.theindoorgardener.ca
deRiego Revista deRiego Apdo. Postal 86-200 Mexico, D.F. C.P. 14391	www.revistaderiego.com.mx
Urban Garden Magazine	http://urbangardenmagazine.com

AGRICULTURE

Hydroponics for the HOME GROWER

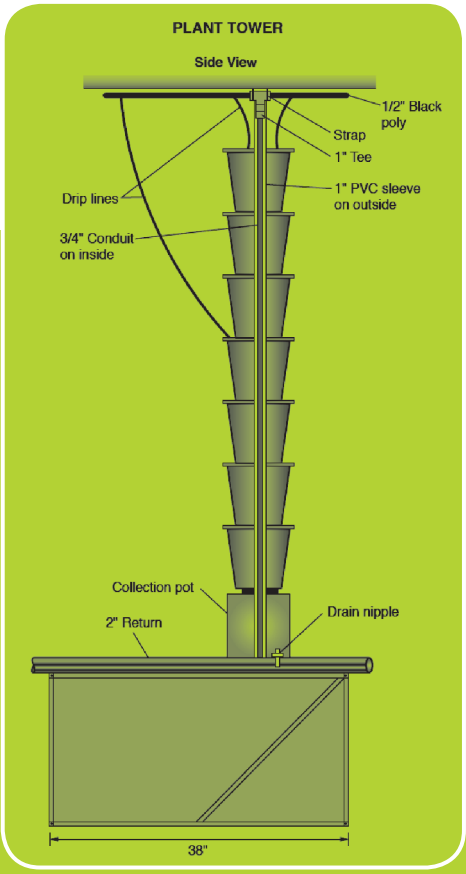

Hydroponics offers many advantages to traditional soil-based horticulture. These include greater control over many of the limiting factors, such as light, temperature, and pests, as well as the ability to grow plants in all seasons. With instruction from one of the top recognized authorities worldwide, ***Hydroponics for the Home Grower*** gives you step-by-step guidance on how to grow tomatoes, peppers, cucumbers, eggplant, lettuce, arugula, bok choy, and various herbs year-round within your home or in a backyard greenhouse.

With Dr. Howard Resh's help, you'll learn:

- Background information on how hydroponics evolved
- The nutritional and environmental demands of plants and how to control these factors
- How to provide formulations of nutrients optimal to the plants you wish to grow
- The many different hydroponic systems you can purchase or build for yourself
- Designs for different types of greenhouses with components to fit your personal taste and budget
- Crop selection and step-by-step procedures, including seeding, transplanting, training, pest and disease control, and harvesting—along with when to plant and when to change crops
- How you can grow microgreens on your kitchen counter

The book includes an appendix with sources of seeds and other supplies, along with helpful websites and lists of books, articles, and conferences on growing hydroponically and caring for your crops. By following the guidelines in this book, you'll understand everything you need to know to get your home-growing operation up and running in no time.

K23265

ISBN: 978-1-4822-3925-6
90000
9 781482 239256

CRC Press
Taylor & Francis Group
an informa business
www.crcpress.com

6000 Broken Sound Parkway, NW
Suite 300, Boca Raton, FL 33487
711 Third Avenue
New York, NY 10017
2 Park Square, Milton Park
Abingdon, Oxon OX14 4RN, UK

www.crcpress.com