E. Shear stress analysis in determinate circular cross-sectioned shafts

NOTATION and SIGN CONVENTIONS:
In this section we will consider circular cross-section shafts experiencing a torque load T along the longitudinal axis of the shaft. Here, we will represent the torque T in one of two ways: as either a directed double arrowed vector or as a directed rotation symbol, as shown in the figures below left and below right, respectively, below. The sense for these torque vectors abides by the right hand rule: curl the fingers of your right hand with the direction of the torque. The sense of the torque points in the direction of your thumb on that hand. For the torques shown below, the torques are positive (with the thumb pointing "outward" on the face of the shaft on which it acts). Conversely, a negative torque has the thumb pointing into the face of the shaft on which it acts.

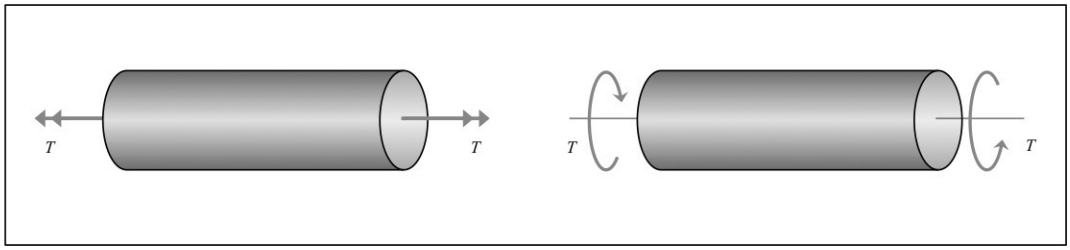

alternate notations for torques acting on a shaft

Shear strain and shear stress from torque loads:
Consider a straight shaft with a circular cross section of outer radius r. A torque T is applied along the longitudinal axis of the shaft as shown below. A differential stress cube at a radius of ρ at some location in the shaft is shown above. As a result of the applied torque, a state of pure shear is developed in the stress cube. The resultant force on the face of the stress cube at the cut is given by $dF = \tau dA$, where A is the area of the shaft cross section. The torque on the cut face of the shaft due to this differential force is $dT = \rho dF = \tau \rho dA$. For a linearly elastic material, we have:

$$\tau = G\gamma$$

From this we have following relation between the applied torque and the developed shear stress:

$$T = \int_A \rho G \gamma dA$$

Consider two points R and S on the surface of an annular section of the shaft of radius ρ and length Δx where R is at a location x and S is at location $x + dx$. As a result of the applied torque, the shaft experiences a rotational deformation with R rotating through an angle of $\phi(x)$ to R* and S rotating through an angle of $\phi(x + dx)$ to S*, as shown in the figure.

It can be shown through geometry that the following relationship exists between the shear strain γ and the angle of twist ϕ for the shaft:

$$\gamma = \rho \frac{d\phi}{dx}$$

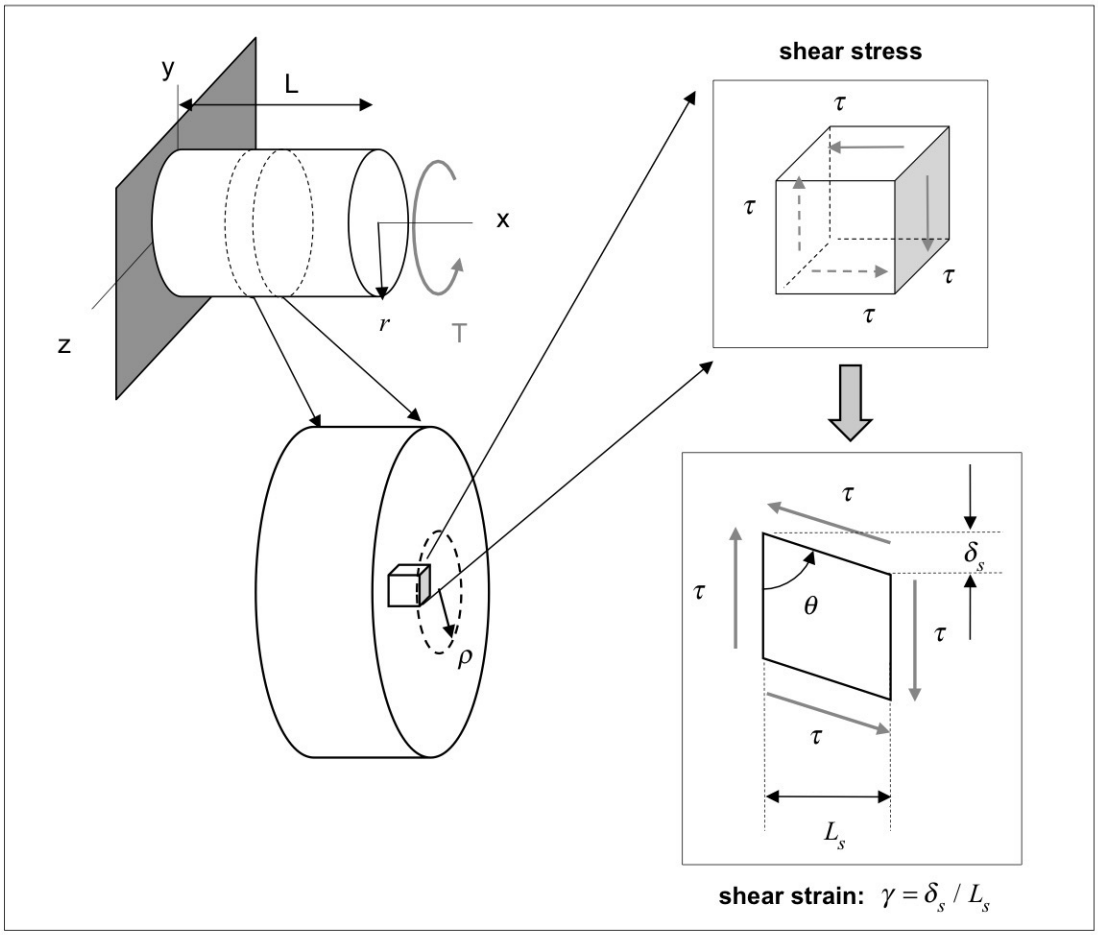

shear stress and shear strain under torsional load

Therefore combining the above equations, and for G constant across the cross section, we have:

$$T = G\frac{d\phi}{dx}\int_A \rho^2 dA = GJ\frac{d\phi}{dx} \qquad \rightarrow \qquad \frac{d\phi}{dx} = \frac{T}{GJ} = \frac{\gamma}{\rho} = \frac{\tau}{G\rho}$$

where $J = \int_A \rho^2 dA =$ "polar area moment" for the shaft cross section.

Therefore:

$$\tau = \frac{T\rho}{J}$$

Discussion of results

- The above equation shows that the shear stress in a circular shaft due to an applied torque T varies linearly with radial distance ρ from the center of the shaft.
- The maximum shear stress in the shaft occurs on the outer perimeter of the shaft (for $\rho = r$) and is given by:

$$\tau_{max} = \frac{Tr}{J}$$

- For a solid shaft, the polar area moment J of the shaft becomes:

$$J = \int_A \rho^2 dA = \int_A \rho^2 \left(\rho d\rho d\theta\right)$$
$$= \int_0^{2\pi} \left(\int_0^r \rho^3 d\rho \right) d\theta = \frac{1}{2}\pi r^4$$

- For a tubular shaft with inner radius r_i and outer radius r_o, the polar area moment J of the shaft becomes:

$$J = \int_0^{2\pi} \left(\int_{r_i}^{r_o} \rho^3 d\rho \right) d\theta = \frac{1}{2}\pi \left(r_o^4 - r_i^4\right)$$

- The shear stress distributions for the solid and tubular shafts are shown in the following figures. As with all circular shafts (solid or tubular, the shear stress varies linearly with radial position ρ to a maximum value at the outer surface $\rho = r$.

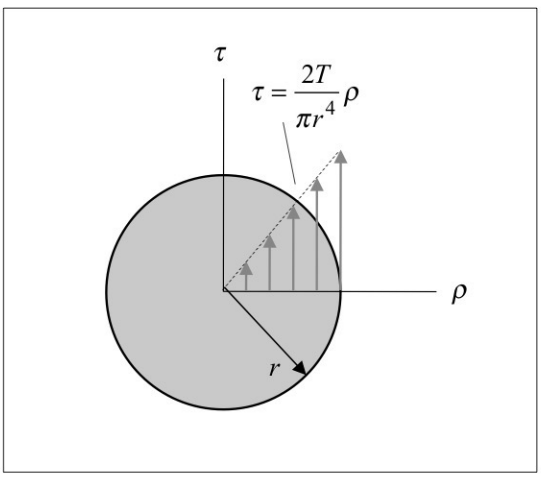

shear stress in solid shaft

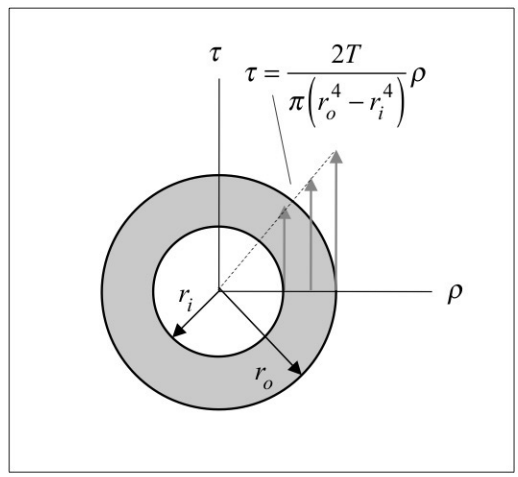

shear stress in tubular shaft

CHALLENGE QUESTION: In many applications, circular cross-sectioned shafts carrying torque loads are made with a tubular design. What is the advantage for such a design to be made of a hollow tube?

ANSWER: For the same torque T carried and same outer radius $r_o = r$ the ratio of the maximum shear stress in the tubular shaft over the maximum shear stress in the solid shaft is given by:

$$\begin{aligned}\frac{(\tau_{max})_{tubular}}{(\tau_{max})_{solid}} &= \frac{Tr_o/J_{tubular}}{Tr_o/J_{solid}} \\ &= \frac{J_{solid}}{J_{tubular}} = \frac{\frac{1}{2}\pi r_o^4}{\frac{1}{2}\pi\left(r_o^4 - r_i^4\right)} > 1\end{aligned}$$

Therefore, $(\tau_{max})_{tubular} > (\tau_{max})_{solid}$. Removal of the material in making the shaft hollow actually INCREASED the maximum shear stress. Not a good result!

It is clear that removing the material reduces the weight of the shaft. Does this weight (and cost) reduction offset the increase in stress? Let's check this out for the case of $r_i = r_o/2$. In this case, the cross-sectional area of the shaft is reduced by 25%:

$$\frac{A_{tubular}}{A_{solid}} = \frac{\frac{1}{2}\pi\left(r_o^2 - r_i^2\right)}{\frac{1}{2}\pi r_o^2} = 0.75$$

whereas the maximum shear stress is increased by only 7%:

$$\frac{(\tau_{max})_{tubular}}{(\tau_{max})_{solid}} = \frac{\frac{1}{2}\pi r_o^4}{\frac{1}{2}\pi\left(r_o^4 - r_i^4\right)} = \frac{16}{15}$$

Power Transmission

$$\boxed{P = T\omega}$$

where P = Power (work performed per unit of time)

T = Torque

ω ~~W~~ = Angular speed of shaft (rad/s)

Power often measured in horsepower (hp)

$$\boxed{1\ \text{hp} = 550\ \frac{\text{ft-lb}}{\text{s}}}$$

Power can also be expressed as a function of frequency (f)

$$\boxed{P = 2\pi f\, T}$$

where f = frequency (in cycles/sec or Hz)

Note: $\omega = 2\pi f$

Shaft Design

When the Power (p) and frequency (f) of a shaft are known, the torque developed can be determined

$$\boxed{T = P / \left(2\pi f\right)}$$

Knowing the torque (T) and the allowable shear stress (τ_{Allow}), the size of the shaft's cross-section can be determined (assuming small strains in the linear elastic range).

A common geometric (design) parameter is

$$\boxed{\frac{J}{r} = \frac{T}{\tau_{Allow}}}$$

Remember, $J = \left(\frac{\pi}{2}\right) r^4$ Solid Shaft

$J = \left(\frac{\pi}{2}\right) \left(r_o^4 - r_i^4\right)$ Tubular Shaft

Example 11.E.5

Given: The solid circular shaft of diameter d shown below left has a maximum shear stress $\tau_{max,a}$ under the action of a torque T_a. The hollow shaft shown below right has outer and inner diameters of d_o and d_i, respectively, carries a torque of T_b and experiences a maximum shear stress $\tau_{max,b}$. The weights of the solid and hollow shafts are the same.

Find: What is the ratio T_b/T_a required in order for $\tau_{max,a} = \tau_{max,b}$?

Use the following parameter in your analysis: $d_o/d_i = 1.2$.

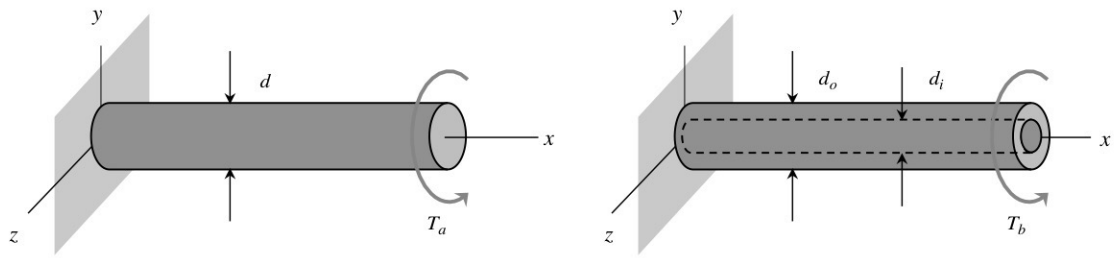

shaft (a) *shaft (b)*

Example 11.E.7

Given: A lunar soil sampler consists of a tubular shaft that has an inside diameter d_i and an outer diameter of d_1. The material make up of the shaft has a shear modulus of G. The torque on the tubular shaft is created by the astronaut applying a pair of forces P at opposite ends of arm DE. The resistive torque/length on the shaft by the soil, t_0, is constant along the length of the shaft on which its acts.

Find: For this problem:
(a) Determine the maximum shear stress in the shaft AC.
(b) Where along the shaft dues this maximum shear stress exist?

Use the following parameters in your analysis: d_i = 45 mm, d_o = 60 mm, h = 1.5 m, b = 1.0 m, L = 125 mm and P = 150 N.

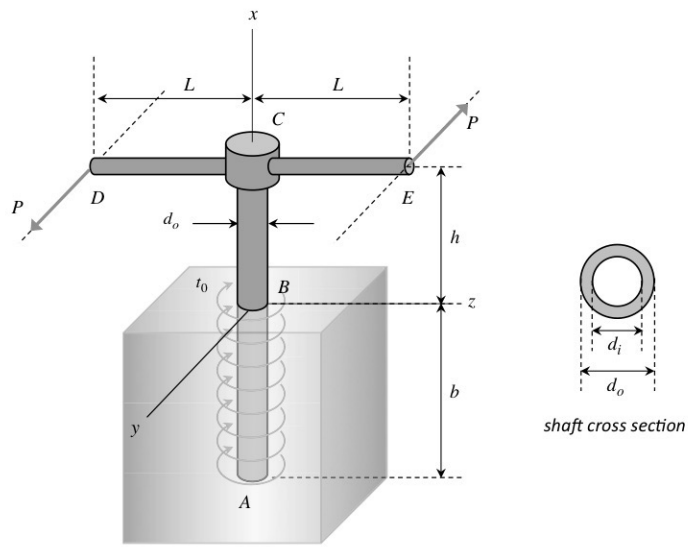

Quiz

~~Example 11.E.3 - Solved~~

Given: The shaft shown (with an outer diameter of d) is solid from C to B and tubular from B to A, with the wall thickness of the tubular section being t.

Find: Determine the maximum shear stress developed in the shaft and identify the location(s) on the shaft where this maximum shear stress occurs.

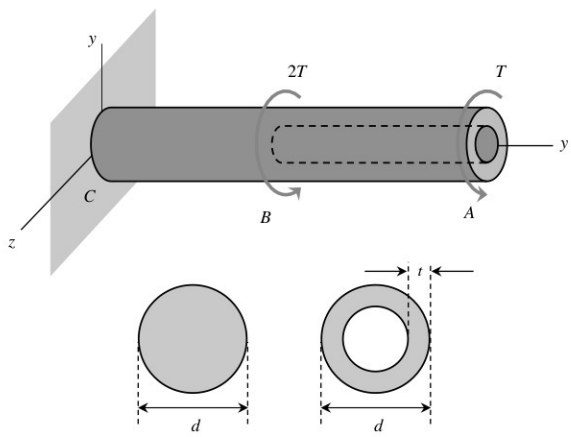

shaft cross section between C and B

shaft cross section between B and A

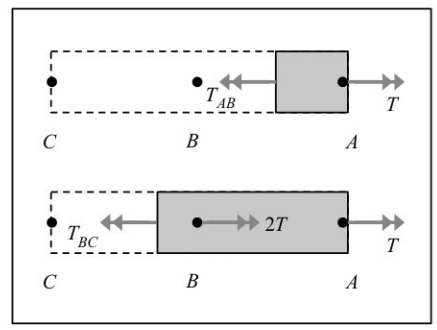

FBDs

Section BC

Equilibrium:

$$\sum M = -T_{BC} + 2T + T = 0 \quad \Rightarrow \quad T_{BC} = 3T$$

Polar area moment:

$$J_{BC} = \frac{\pi}{2}\left(\frac{d}{2}\right)^4 = \frac{\pi}{32}d^4$$

Maximum stress:

$$(\tau_{BC})_{max} = \frac{T_{BC}(d/2)}{J_{BC}} = \frac{3T(d/2)}{\pi d^4/32} = 48\frac{T}{\pi d^3}$$

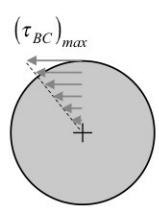

Section AB

Equilibrium:

$$\sum M = -T_{AB} + T = 0 \quad \Rightarrow \quad T_{AB} = T$$

Polar area moment:

$$J_{AB} = \frac{\pi}{2}\left[\left(\frac{d}{2}\right)^4 - \left(\frac{d-2t}{2}\right)^4\right] = \frac{\pi}{32}\left[d^4 - (d-2t)^4\right]$$

Maximum stress:

$$(\tau_{AB})_{max} = \frac{T_{AB}(d/2)}{J_{AB}} = \frac{T(d/2)}{\pi\left[d^4 - (d-2t)^4\right]/32}$$
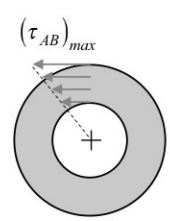
$$= 16\frac{Td}{\pi\left[d^4 - (d-2t)^4\right]}$$