FORCE COUPLES

Learning Objectives

1). To determine a resultant torque of a system of *force couples*.

2). To determine an *equivalent force-couple* of a system of forces and moments.

3). To do an *engineering estimate* of this quantity.

Motivation:

Forces & Moments $\longrightarrow$ change motion

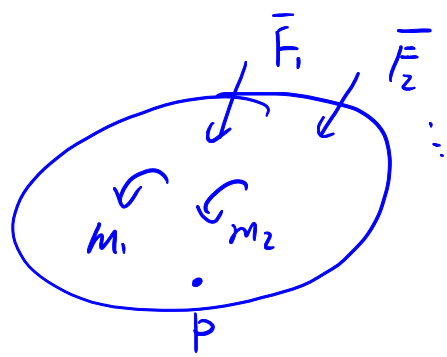

Motion:

① translation : — $\Sigma \bar{F}$

② rotation about a point — ΣM_P

In analysis, we want to replace the body by a point:

$\Rightarrow$ All forces & moments $\xrightarrow{\text{replaced by}}$ $\begin{cases} \text{a single force (translation)} \\ \text{a single moment (Force Couple) (rotation)} \end{cases}$

have the same effect of changing motion.

$|\bar{M}| = |\bar{F}|\,d$

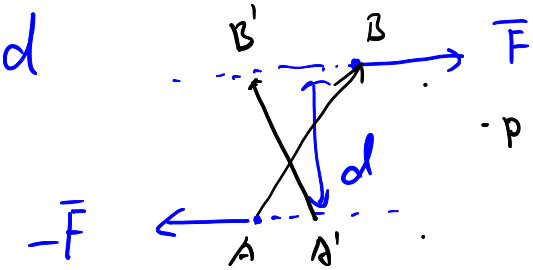

Definition

Force Couple: a pair of forces which are (i) equal in magnitude, (ii) parallel and (iii) opposite in direction.

$$|\bar{M}| = |\bar{F}|\,d$$

only causes rotational effect

where d = perpendicular distance between the lines of action of the forces forming the couple.

Choose any point P:

$$\bar{M}_P = \bar{r}_{PA} \times (-\bar{F}) + \bar{r}_{PB} \times \bar{F}$$
$$= (\bar{r}_{PB} - \bar{r}_{PA}) \times \bar{F}$$
$$= \bar{r}_{AB} \times \bar{F}$$

$$\Rightarrow |\bar{M}_P| = |\bar{F}|\,d$$

$$\bar{M} = \bar{r}_{AB} \times \bar{F}$$

recall: moment does not change along line of action

where $\bar{r}_{AB}$ = any position vector between the lines of action of the forces forming the couple.

Comments

1). Force couples cause *no net force* (i.e., $\sum \bar{F} = 0$).

2). The moment due to a force couple is the *same* regardless of the point the moment is summed about. (This not true of a non-couple).

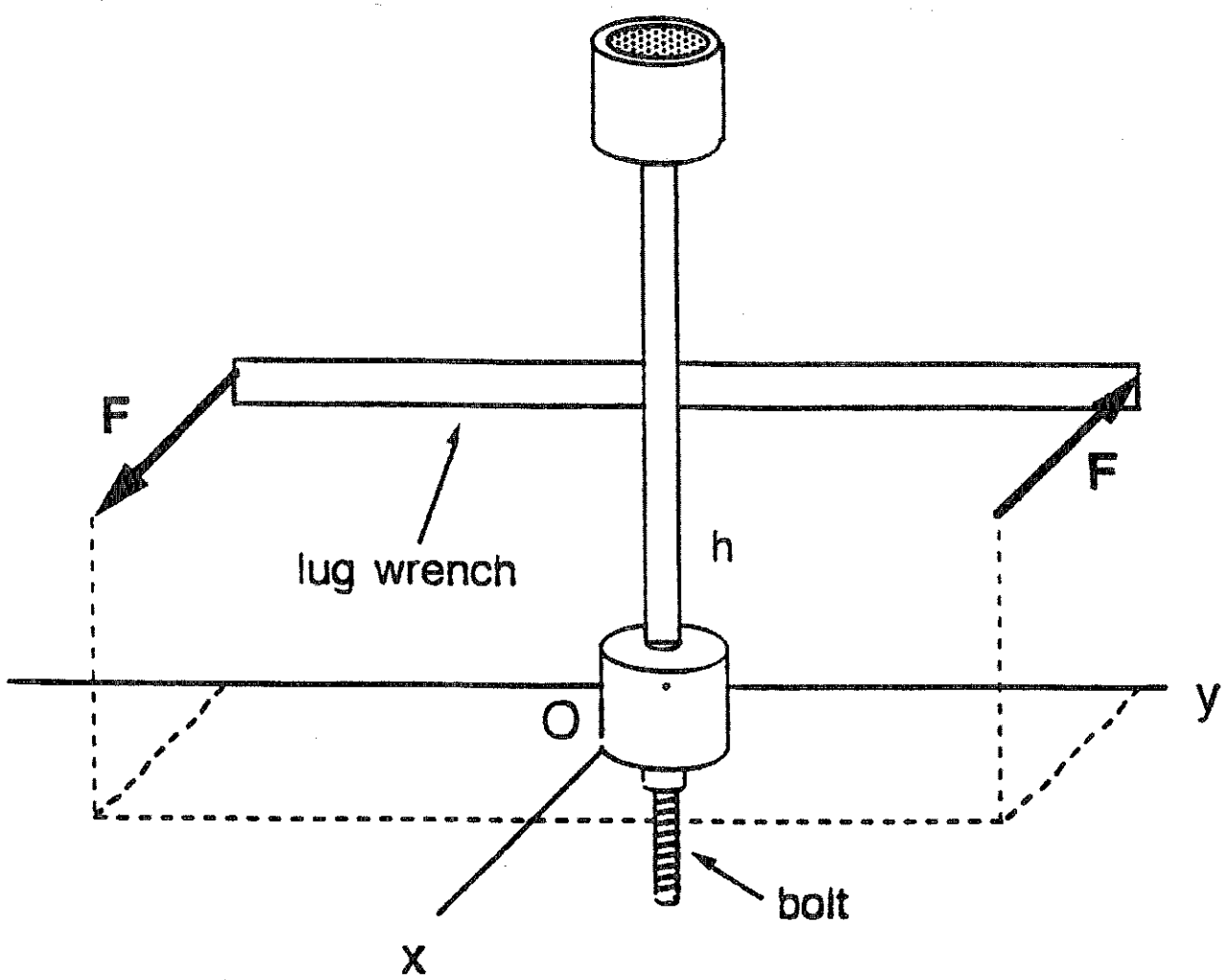
F
F
lug wrench
h
O
y
x
bolt

Force Couples
Example 1

Given: Angled bar ABCDE is loaded with several force couples as shown.

Find:

a) Determine the magnitude and direction of each force couple pair.

b) Determine the equivalent moment and direction of all of the force couples combined.

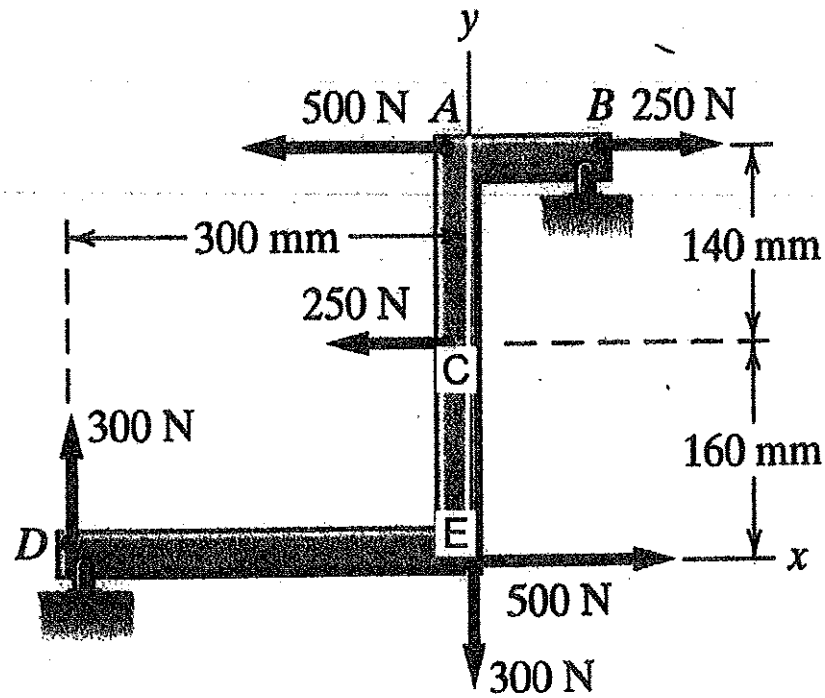

Solution:

a)

500 N Forces: $(500)(0.3)\bar{k} = 150\,\bar{k}$ N·m

250 N Forces: $-(300)(0.14)\bar{k} = -35\,\bar{k}$ N·m

300 N Forces: $-(300)(0.3)\bar{k} = -90\,\bar{k}$ N·m

b) $\Sigma\bar{M} = (150 - 35 - 90)\bar{k} = 25\,\bar{k}$ N·m

Note: $\Sigma\bar{F} = 0$ No net force.

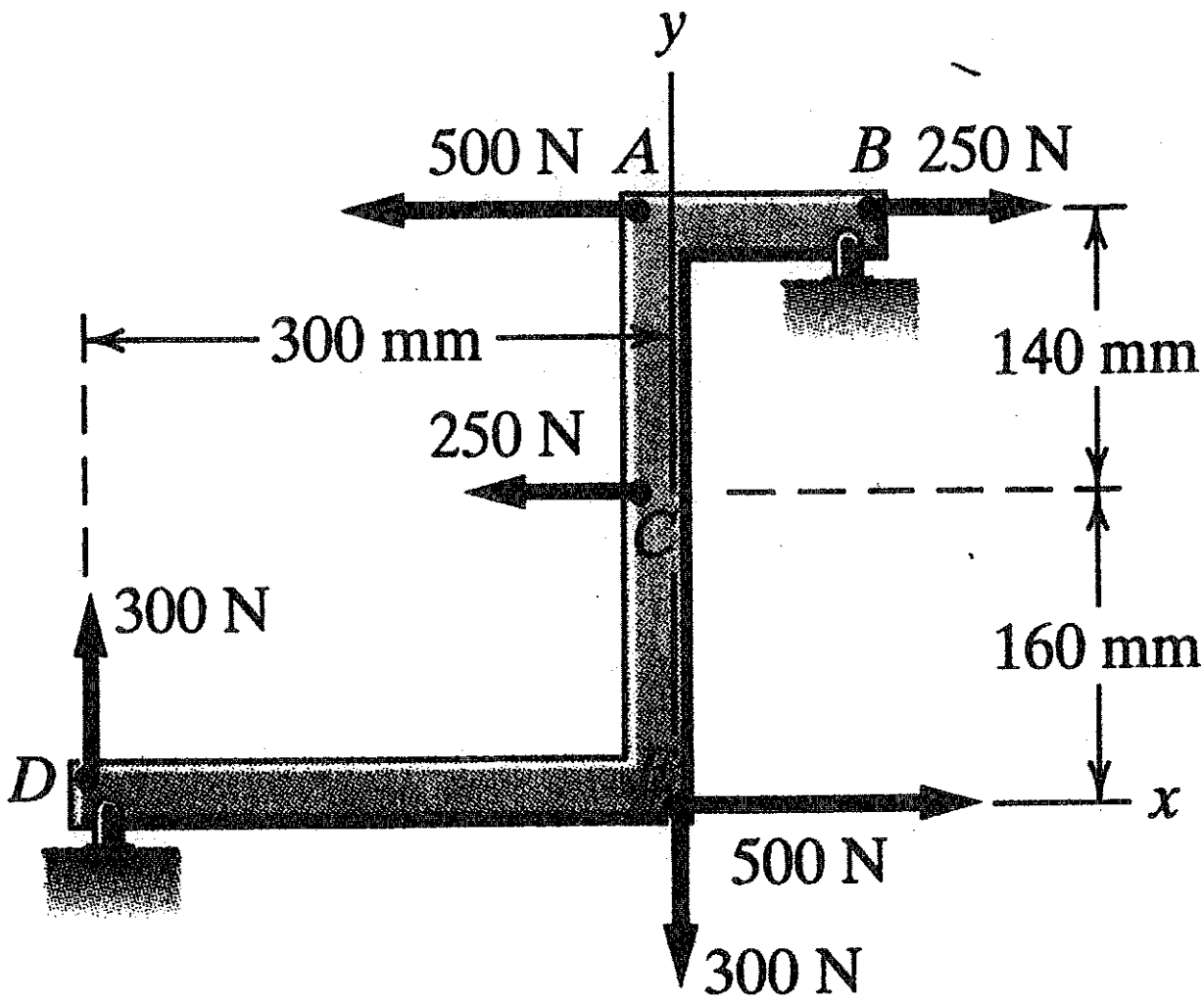
y
500 N
A
B
250 N
300 mm
140 mm
250 N
C
300 N
160 mm
D
x
500 N
300 N

Force Couples
Example 2

Given: The rod and plate system is loaded by several force couples.

Find:

a) Determine the equivalent magnitude and direction of each force couple.

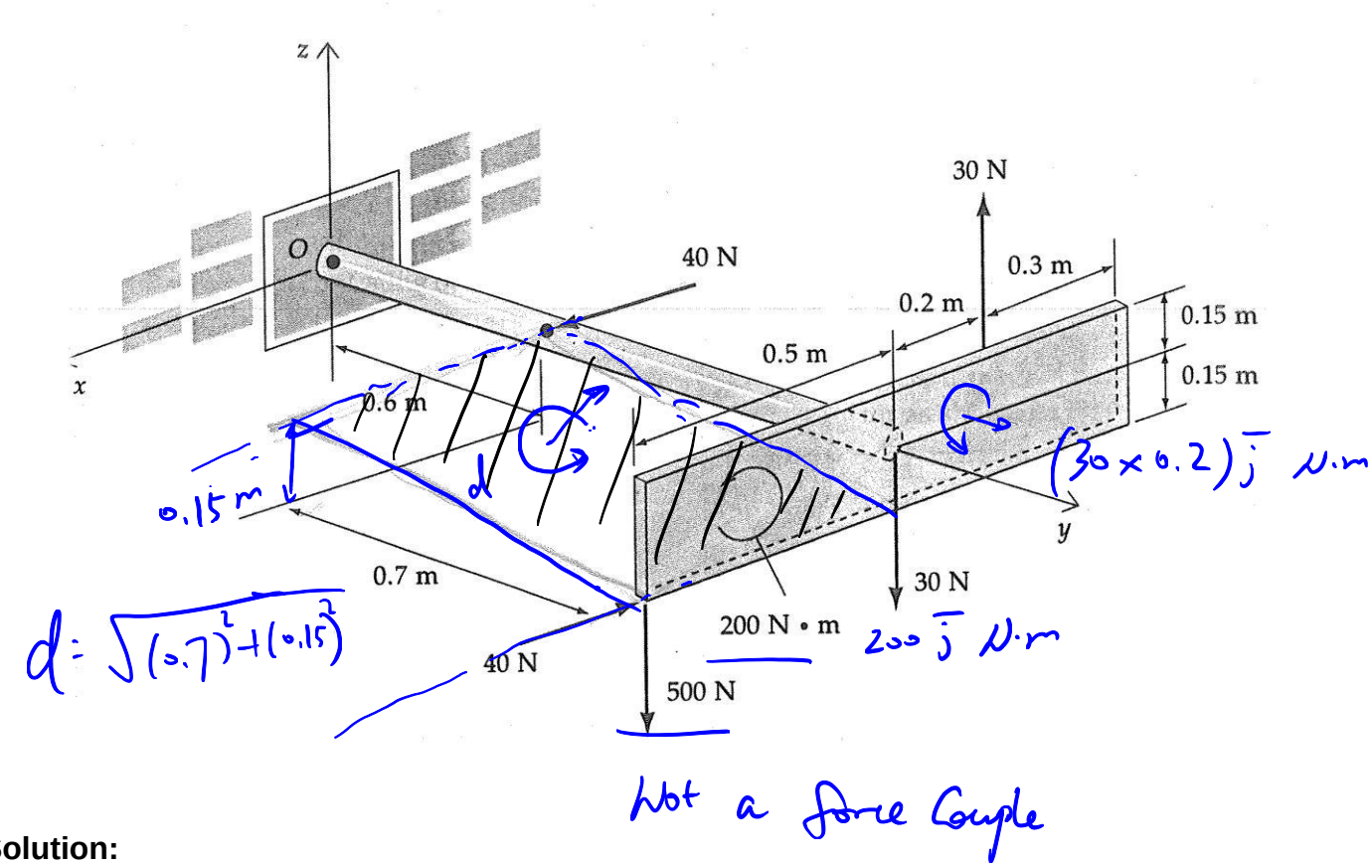

Solution:

EQUIVALENT SYSTEMS – have the same net effect:

<u>Learning Objectives</u>

$\left\{ \begin{array}{l} \text{Same } \Sigma \bar{F} \\ \text{Same } \Sigma \bar{M}_P \end{array} \right.$

1). To determine an *equivalent force-couple* of a system of forces and moments.

2). To do an *engineering estimate* of this quantity.

Definition

Equivalent Systems: two force-couple systems which exert i) the same net force on a body and ii) the same net moment (or torque).

Force Condition:	$(\sum \overline{F})_1 = \left(\sum \overline{F}\right)_2$
Moment Condition:	$(\sum M_P)_1 = (\sum M_P)_2$

Note: Selection of point P is arbitrary. Thus, choose a point that will simplify the moment equation.

Force-Couple Equivalent

Force: $$\overline{R} = \sum \overline{F} = \overline{F_1} + \overline{F_2} + \overline{F_3} + \ldots$$

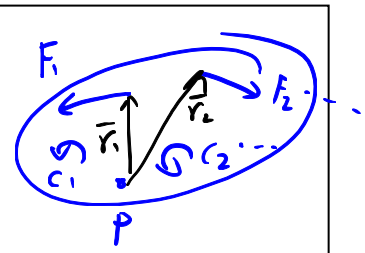

Moment:

$$\overline{M_P} = \sum \overline{M_P} = \left(\overline{r_1} \times \overline{F_1}\right) + \ldots + \left(\overline{r_2} \times \overline{F_2}\right) + \left(\overline{r_3} \times \overline{F_3}\right) + \ldots + \overline{C_1} + \overline{C_2} + \ldots$$

$$= \sum_{i=1}^{N_F} \left(\overline{r_i} \times \overline{F_i}\right) + \sum_{i=1}^{N_c} \overline{C_i}$$

$\therefore$ *Equivalent Force-Couple System*: $\overline{F_R}, \overline{M_{R_P}}$ (about point P).

Show that Equivalent about $P \Leftrightarrow$ Equivalent about Q:

Two systems are equivalent about P:

$$\left(\Sigma \bar{F}\right)_{sys1} = \left(\Sigma \bar{F}\right)_{sys2}, \quad \left(\Sigma \bar{M}_P\right)_{sys1} = \left(\Sigma \bar{M}_P\right)_{sys2}$$

Since $\Sigma \bar{F}$ does not depend on the choice of rotation point,

We only need to prove: $\left(\Sigma \bar{M}_Q\right)_{sys1} = \left(\Sigma \bar{M}_Q\right)_{sys2}$

Proof: $$\left(\Sigma \bar{M}_Q\right)_{sys1} = \left(\bar{r}_{Q_1} \times \bar{F}_1\right)_{sys1} + \left(\bar{r}_{Q_2} \times \bar{F}_2\right)_{sys1} + \cdots + \left(\bar{C}_1 + \bar{C}_2 + \cdots\right)_{sys1}$$

$$= \left[\left(\bar{r}_{QP} + \bar{r}_{P_1}\right) \times \bar{F}_1\right]_{sys1} + \left[\left(\bar{r}_{QP} + \bar{r}_{P_2}\right) \times \bar{F}_2\right]_{sys1} + \cdots + \left(\bar{C}_1 + \bar{C}_2 + \cdots\right)_{sys1}$$

$$= \bar{r}_{QP} \times \left(\Sigma \bar{F}_i\right)_{sys1} + \underbrace{\Sigma\left(\bar{r}_{P_i} \times \bar{F}_i\right)_{sys1} + \Sigma\left(\bar{C}_i\right)_{sys1}}_{= \Sigma\left(\bar{M}_P\right)_{sys1}}$$

$$= \bar{r}_{QP} \times \left(\Sigma \bar{F}\right)_{sys1} + \Sigma\left(\bar{M}_P\right)_{sys1}$$

Similarly: $$\left(\Sigma \bar{M}_Q\right)_{sys2} = \bar{r}_{QP} \times \left(\Sigma \bar{F}\right)_{sys2} + \Sigma\left(\bar{M}_P\right)_{sys2}$$

Since $\left(\Sigma \bar{F}\right)_{sys1} = \left(\Sigma \bar{F}\right)_{sys2}$ and $\Sigma\left(\bar{M}_P\right)_{sys1} = \Sigma\left(\bar{M}_P\right)_{sys2}$

$$\Rightarrow \left(\Sigma \bar{M}_Q\right)_{sys1} = \left(\Sigma \bar{M}_Q\right)_{sys2}.$$

Equivalent Force-Couple Systems
Example 1

Given: Below are six system of forces and couples acting on bar AB.

Find:

a) Which of these system of forces and couples are equivalent?

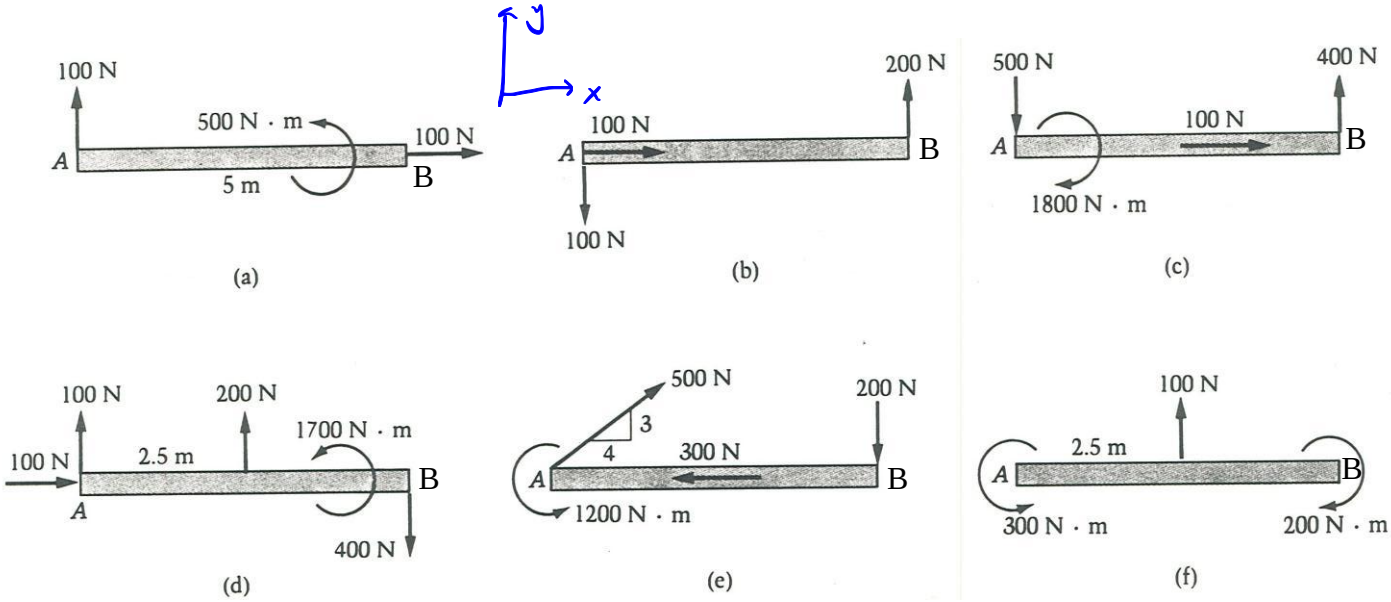

Solution:

Check (a) and (b):

(a): $\bar{F}_R = \Sigma \bar{F} = 100\,\bar{j} + 100\,\bar{i}$ N

$\bar{M}_{R_A} = \Sigma \bar{M}_A = 0 + 0 + 500\,\bar{k}$ N·m

(b) $\bar{F}_R = \Sigma \bar{F} = -100\,\bar{j} + 100\,\bar{i} + 200\,\bar{j}$

$= 100\,\bar{i} + 100\,\bar{j}$ N

$\bar{M}_{R_A} = \Sigma \bar{M}_A = 0 + 0 + 5 \times 200\,\bar{k}$ N·m

$= 1000\,\bar{k}$ N·m

$\Rightarrow$ (a) and (b) are <u>not</u> equivalent.

Equivalent Force-Couple Systems
Example 2

Given: Curved bar AB is loaded with a 100 lb force and a 1500 lb-in couple as shown.

Find:

a) Estimate the equivalent force-couple system at base A.

b) Calculate the equivalent force-couple system at base A.

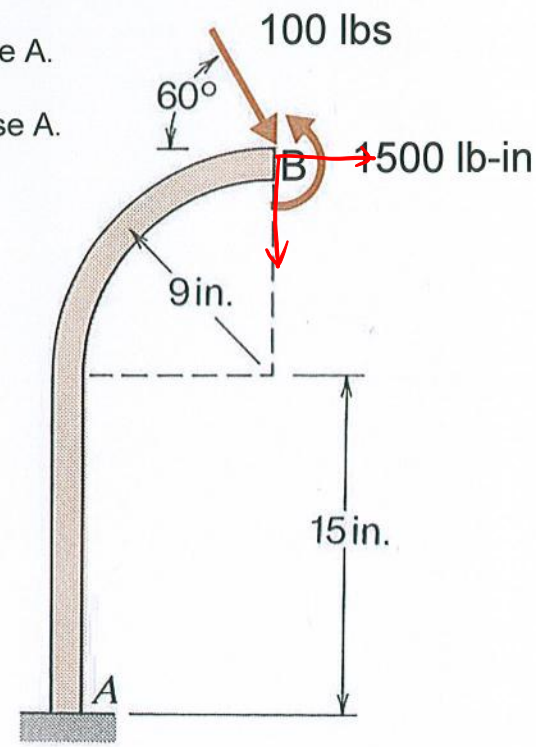

Solution:

b). $\bar{F}_{eq} = \Sigma \bar{F}$

$= 100 \cos 60° \, \bar{i} - 100 \sin 60° \, \bar{j}$ lbs

$= 50 \, \bar{i} - 86.6 \, \bar{j}$ lbs

$(\bar{M}_{eq})_A = -(15+9)(100 \cos 60°)\bar{k} - (9)(100 \sin 60°)\bar{k}$

$+ 1500 \, \bar{k}$

$= -479 \, \bar{k}$ lb·in.

Equivalent Force-Couple Systems

Example 3

Given: Traffic light pole BCDE is loaded with a 200 N traffic light at E and partially supported by cable BA. (DE = 3m)

Find: Additional Condition : $F_{BA} = 400\ N$

a) Determine the equivalent force-couple system at base C.

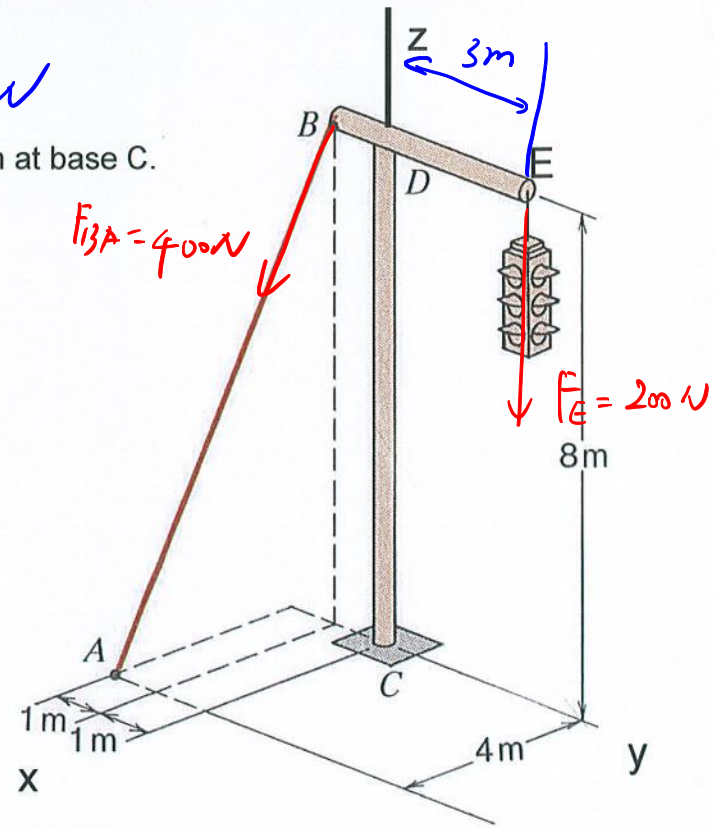

Solution:

$$\bar{F}_{BA} = 400\left(\frac{-4\bar{i} - 1\bar{j} - 8\bar{k}}{\sqrt{(-4)^2+(-1)^2+(-8)^2}}\right)$$

$$= 178\bar{i} - 44.4\bar{j} - 356\bar{k}\ N$$

$$\bar{F}_E = -200\ \bar{k}\ N$$

$$\Rightarrow \bar{F}_{eq} = \Sigma\bar{F} = \bar{F}_{BA} + \bar{F}_E = 178\bar{i} - 44.4\bar{j} - 556\bar{k}\ N$$

$$\bar{r}_{CB} = 0\bar{i} - 1\bar{j} + 8\bar{k}\ m, \quad \bar{r}_{CE} = 0\bar{i} + 3\bar{j} + 8\bar{k}\ m$$

$$\Rightarrow (\bar{M}_{eq})_C = \bar{r}_{CB} \times \bar{F}_{BA} + \bar{r}_{CE} \times \bar{F}_E$$

$$= 111\bar{i} + 1424\bar{j} + 178\bar{k}\ N.m$$

Equivalent Force-Couple Systems
Example 4

Given: Force-couple system I shown *below left* is made up of four forces F_1, F_2, F_3, and F acting at points A, B, C, and D, respectively, in addition to a couple *M*. Force *F* and couple *M* are *known* to have magnitudes of 200 lb and 900 ft-lb, respectively.

Force-couple system II shown *below right* is made up of a force R at B and a couple M_B, with *R* and M_B, having *known* magnitudes of 300 lb and 600 ft-lb, respectively.

Find: If System II is to be the *equivalent force-couple* of System I, what are the magnitudes of the forces F_1, F_2, and F_3?

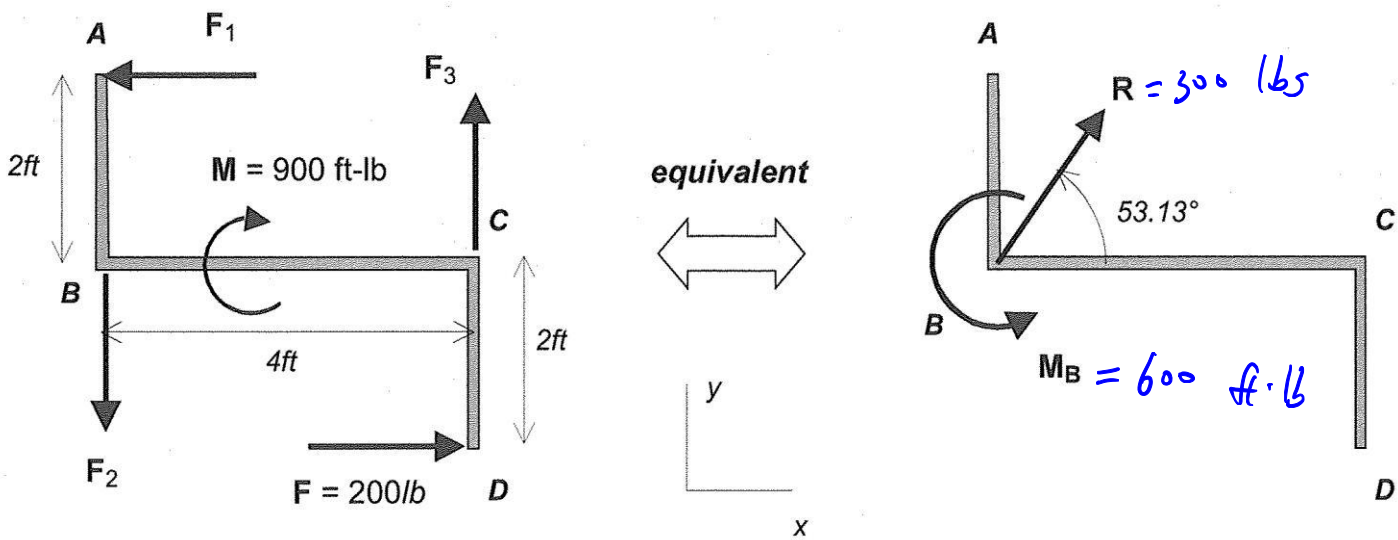

Solution:

$$(\Sigma \bar{F})_1 = (\Sigma \bar{F})_2$$

$$(\Sigma F_x)_1 = (\Sigma F_x)_2 : \quad -F_1 + 200 = R\cos 53.13^\circ$$

$$(\Sigma F_y)_1 = (\Sigma F_y)_2 : \quad -F_2 + F_3 = R\sin 53.13^\circ$$

$$(\Sigma \bar{M}_B)_1 = (\Sigma \bar{M}_B)_2 : \quad 2F_1 + 4F_3 + 2(200) - 900 = 600$$

$$\Rightarrow \quad F_1 = 20 \text{ lbs} \qquad F_2 = 25 \text{ lbs} \qquad F_3 = 265 \text{ lbs}$$

Equivalent Force-Couple Systems
Group Quiz

Group #: _____ Group Members: 1) _____
(Present Only)

Date: _____ Period: _____ 2) _____

3) _____

4) _____

Given: A pipe assembly has a force system shown.

Find:

a) Find a force-couple resultant at point A (F_r, M_{rA}) which is equivalent to the force system shown.
b) If the 50N-m couple were shifted down pipe CA, what effect would this have on the equivalent force-couple system at point A?

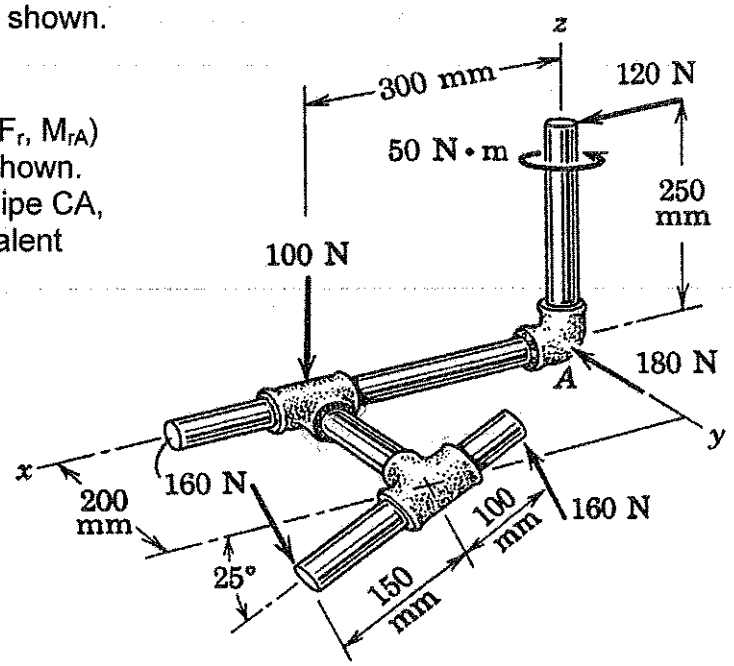

Solution:

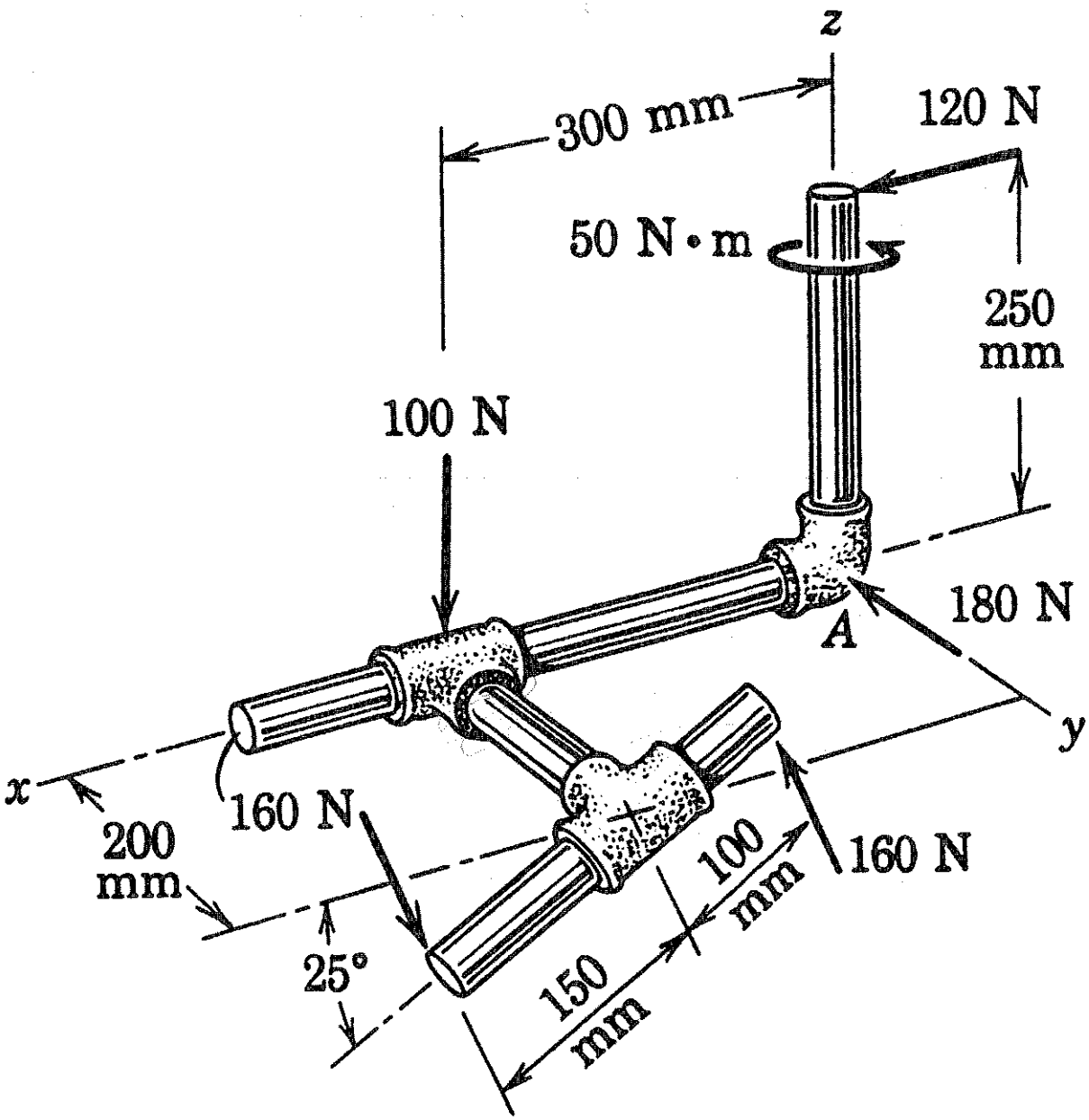

Problem 2/138

ME 270 - Basic Mechanics I - Group Quiz

Name/Group #: _____ Group Members: 1) _____ 2) _____

Date: _____ Period: _____ 3) _____ 4) _____

Given: A pipe assembly has a force system shown.

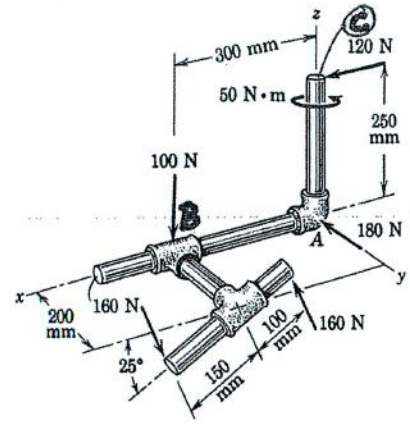

Find: (a) Find a force-couple resultant at point A ($\underline{F_r}$, $\underline{M_{rA}}$) which is equivalent to the force system shown.

(b) If the 50N-m couple were shifted down pipe CA, what effect would this have on the equivalent force-couple system at point A.

Solution: (a) $\bar{F}_R = \bar{F}_A + \bar{F}_B + \bar{F}_C$

$$\bar{F}_R = (-180\bar{j}) + (-100\bar{k}) + (120\bar{i}) = \boxed{120\bar{i} - 180\bar{j} - 100\bar{k}\ N}$$

$$\bar{M}_{R_A} = \Sigma \bar{M}_A = (\bar{r}_{AB} \times \bar{F}_B) + (\bar{r}_{AC} \times \bar{F}_C) + \bar{C}_1 + \bar{C}_2$$

$$= (0.300\bar{i} \times -100\bar{k}) + (0.250\bar{k} \times 120\bar{i}) + 50\bar{k} + (0.250)160\bar{j}$$

$$= 30\bar{j} + 30\bar{j} + 50\bar{k} + 40\bar{j}$$

$$\boxed{\bar{M}_{R_A} = 100\bar{j} + 50\bar{k}\ N\text{-m}}$$

(b) The location of the point of application of couples have <u>no</u> effect on the equivalent force-couple system.