Homework H11.A

Given: The door is loaded at D with a load F, and is supported by a cable CE and hinges at A and B. The hinge at B *carries* a load in the x-direction and the hinge at A *does NOT* carry a load in the x-direction.

Find:

a) Determine the tension in cable CE.
b) Determine the reactions at hinges A and B.

Use the following parameters in your work: $|\vec{F}| = 400$ N, $h = 0.40$ m and $d = 0.5$ m.

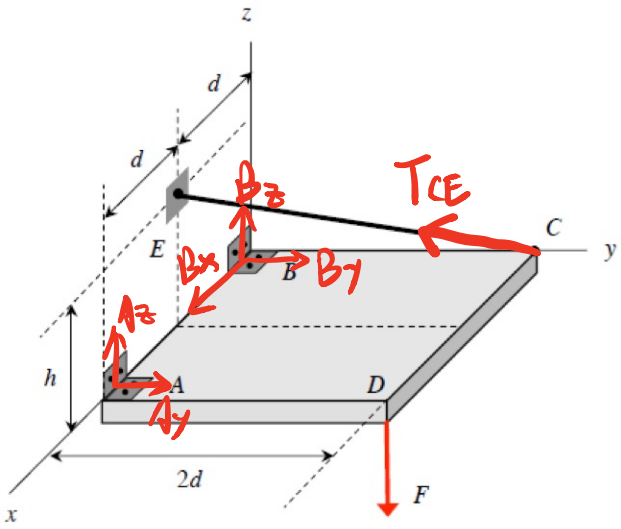

* In other cases, the problem could give you tension, T_{CE}, and ask for F

Homework H11.B

Given: Pole AB is fixed into the ground. A load of F is applied at location E, and the tensions in cables BC and BD are known to be T_{BC} and T_{BD}, respectively.

Find: Determine all the reactions at A.

Use the following parameters in your work: $T_{BC} = T_{BD} = F = 200$ N, $h = 1$ m, $b = d = 2$ m and $L = 4$ m.

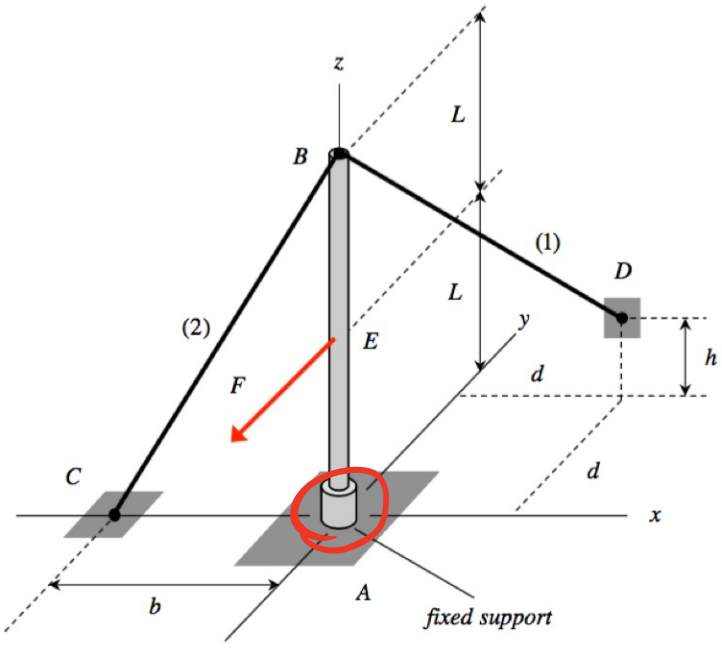

Group Quiz

Group #:_____ **Names:** _____ _____

_____ _____

Given: The pipe structure shown is attached to ground with a fixed connection at A. A set of three forces acts on the structure. The weight of the structure is negligible compared to the applied forces acting on the structure.

Find: Determine the reactions on the structure at A. Write your answers as vectors in terms of, at most, F and d.

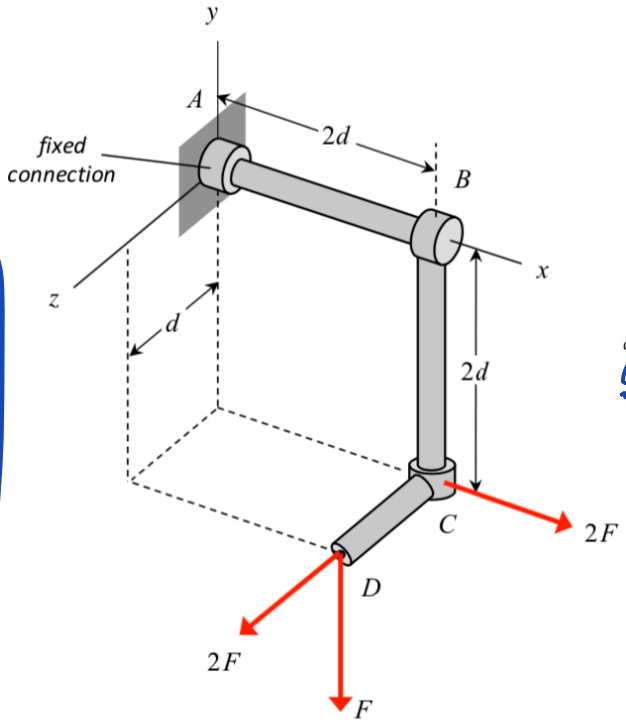

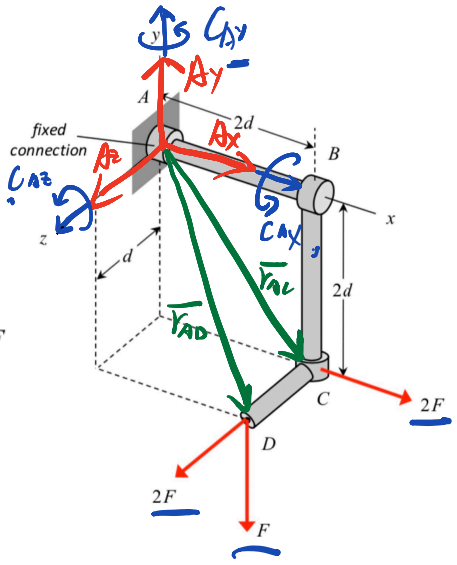

Solutions are shown on next page and in Lec11 notes.

Feedbacks

① A clear view is created if you draw FBD in a separate sketch to identify all the forces and moments (given/unknown, applied/reaction).

② Two types of moment: { (1) due to a force with a arm about a point. (2) due to a force couple.

③ $\bar{M}_A = \bar{r} \times \bar{F}$ ⇒ arm (position) vector first!

④ Arm vector: "from" moment point "toward" force acting point.

⑤ Cross product calculation { (1) by shortcut (2) by determinant $\begin{vmatrix} \bar{i} & \bar{j} & \bar{k} \\ r_x & r_y & r_z \\ F_x & F_y & F_z \end{vmatrix}$ } equivalent methods.

☆ Identify all the forces & moments (force couple) & arms.

☆ Short cut for this example:

all the external forces are acting along coordinate axis

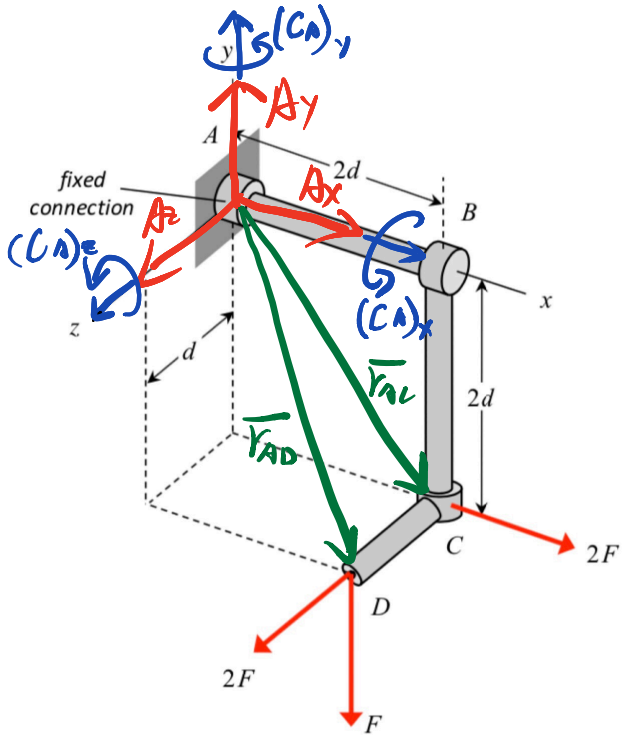

⇒ We can use force equilibrium first

$$\sum F_x = 0 = A_x + 2F$$

$$\Rightarrow \boxed{A_x = -2F}$$

$$\sum F_y = 0 = A_y - F$$

$$\Rightarrow \boxed{A_y = F}$$

$$\sum F_z = 0 = A_z + 2F \Rightarrow \boxed{A_z = -2F}$$

$$\Rightarrow \boxed{\bar{A} = -2F\bar{i} + F\bar{j} - 2F\bar{k}}$$

Cross product shortcut

Then use moment equilibrium.

$$\sum \bar{M}_A = \bar{0} = \left[(C_A)_x\bar{i} + (C_A)_y\bar{j} + (C_A)_z\bar{k}\right] + \left(\bar{r}_{AC} \times 2F\bar{i}\right) + \left[\bar{r}_{AD} \times (-F\bar{j})\right] + \left(\bar{r}_{AD} \times 2F\bar{k}\right)$$

$$\Rightarrow \begin{cases} \sum (M_A)_x = 0 \\ \sum (M_A)_y = 0 \\ \sum (M_A)_z = 0 \end{cases} \Rightarrow \begin{cases} (C_A)_x = 3Fd \\ (C_A)_y = 4Fd \\ (C_A)_z = -2Fd \end{cases}$$

$$\Rightarrow \boxed{\bar{C}_A = 3Fd\bar{i} + 4Fd\bar{j} - 2Fd\bar{k}}$$

ME 27000
BASIC MECHANICS I

Course Outcomes [Related ME Program Outcomes in brackets]

1. Develop an understanding of *static equilibrium* and *stresses in statically determinate structures* and how to apply them to engineering systems. [A1, A2]
2. Learn a systematic approach to *problem solving*. [A2]
3. Foster effective mathematical and graphical *communication skills*. [B1]

Statics of Rigid Bodies (9 wks)

Stresses in Statically-Determinate Structures (6 wks)

Fundamentals (2 wks)

1. Newton's Laws
2. Vector algebra; vector components
3. Position, unit and force vectors
4. Dot product
5. Cross product
6. Moment of a force about a point

Static Equilibrium (5 wks)

1. Equilibrium of a particle
2. Support reactions and free body diagrams
3. Static indeterminacy and partial constraints
4. 2-D and 3-D static equilibrium
5. Trusses
   - method of joints
   - method of sections
6. Frames and machines
7. Dry friction
   - Coulomb's Laws
   - Systems with friction
   - Sliding or tipping
   - Wedges

Equivalent Systems (2 wks)

1. Determination of the resultant of concurrent forces
2. Equivalent force/couple systems
3. Centroid and center of mass
   - by composite parts
   - by integration
4. Surface loadings
   - line loads
   - pressure distributions
5. Fluid statics
   - rectangular surfaces

Introduction of Stress and Strain in Materials (1 wk)

1. Basic definitions of stress and strain
2. Mechanical properties of materials
3. Shear stress and strain

Stress Analysis (5 wks)

1. Stress due to axial loading
2. Shear stress due to torsion
3. Shear force and moment diagrams
4. Second area moments for beams
5. Flexural stresses in beams
6. Stress analysis of beams

ME 270 – Basic Mechanics I

Fall 2019

Period		Date	Topic	Reading	Homework
			STATICS		
1	M	Aug. 19	Introduction, Unit Conversions	1.A-F	H1.A, H1.B
2	W	Aug. 21	Position, Unit, and Force Vectors	2.A-B	H2.A, H2.B
3	F	Aug. 23	Dot Product	2.A-E	H3.A, H3.B
4	M	Aug. 26	Particle Equilibrium (2-D)	3.A-F	H4.A, H4.B
5	W	Aug. 28	Particle Equilibrium (3-D)	3.A-F	H5.A, H5.B
6	F	Aug. 30	Moment About a Point	1.D,4.A-B	H6.A, H6.B
B	M	Sep. 2	**Labor Day**		
7	W	Sep. 4	Force Couples, Equivalent Systems	5.A-B	H7.A, H7.B
8	F	Sep. 6	Free Body Diagrams; Equilibrium of Rigid Bodies (2-D)	4.C-D	H8.A, H8.B
9	M	Sep. 9	Equilibrium of Rigid Bodies (2-D)	4.E-G	H9.A, H9.B
10	W	Sep. 11	Equilibrium of Rigid Bodies (3-D)	4.E-G	H10.A, H10.B
11	F	Sep. 13	Equilibrium of Rigid Bodies (3-D)	4.E-G	H11.A, H11.B
12	M	Sep. 16	Distributed Loading	5.D	H12.A, H12.B
13	W	Sep. 18	Centers of Mass of Centroids: By Composite Parts	5.C	H13.A, H13.B
14	F	Sep. 20	Centers of Mass of Centroids: By Integration	5.C	H14.A, H14.B
15	M	Sep. 23	Fluid Statics: Buoyancy	5.E-G	H15.A, H15.B
R	W	Sep. 25	**Review for Exam 1**		
E	Th	Sep. 26	**EXAM 1 (6:30 – 7:30 PM); (Covers Lectures 1-15)**	Ch. 1-5	None assigned
B	F	Sep. 27	**NO LECTURE**		
16	M	Sep. 30	Fluid Statics: Hydrostatic Loads	5.E-F	H16.A, H16.B
17	W	Oct. 2	Fluid Statics: Hydrostatic Loads	5.E-G	H17.A, H17.B
18	F	Oct. 4	Friction: General	6.A-B	H18.A, H18.B
B	M	Oct. 7	**OCTOBER BREAK**		
19	W	Oct. 9	Friction: Slipping-Tipping	6.C	H19.A, H19.B
20	F	Oct. 11	Friction: Flat Belts	6.D	H20.A, H20.B
21	M	Oct. 14	Friction: Wedges	6.E-G	H21.A, H21.B
22	W	Oct. 16	Trusses: Method of Joints	7.A-C	H22.A, H22.B
23	F	Oct. 18	Trusses: Method of Sections	7.E	H23.A, H23.B

Period		Date	Topic	Reading	Homework
24	M	Oct. 21	Trusses: Zero-Force Members	7.C-I	H24.A, H24.B
25	W	Oct. 23	Frames and Machines: Simple Systems	8.A-D	H25.A, H25.B
26	F	Oct. 25	Frames and Machines: Simple Systems	8.A-D	H26.A, H26.B
R	M	Oct. 28	**Review for Exam 2**	Ch. 6-8	None assigned
E	Tu	Oct. 29	**EXAM 2 (6:30 – 7:30 PM); (Covers Lectures 16-26)**		
B	W	Oct. 30	**NO LECTURE**		
27	F	Nov. 1	Internal Force/Couple Analysis	9.A	H27.A, H27.B
28	M	Nov. 4	Shear Force and Bending Moment Diagrams (Pt. Loads)	9.B	H28.A, H28.B
29	W	Nov. 6	Shear Force and Bending Moment Diagrams (Dist. Loads)	9.B	H29.A, H29.B
30	F	Nov. 8	Shear Force and Bending Moment Diagrams (Graph. Meth.)	9.B-E	H30.A, H30.B
31	M	Nov. 11	Stress-Strain Curves; Axial Stress and Strain	10.A-F	H31.A, H31.B
32	W	Nov. 13	Axial Stress and Strain; Factor of Safety	10.A-F	H32.A, H32.B
33	F	Nov. 15	Shear Stress and Strain; Direct Shear	11.A-D	H33.A, H33.B
34	M	Nov. 18	Shear Stress Due to Torsion in Circular and Tubular Shafts	11.E	H34.A, H34.B
35	W	Nov. 20	Shear Stress Due to Torsion in Circular and Tubular Shafts	11.E, F	H35.A, H35.B
36	F	Nov. 22	Flexural Stresses in Beams	12.A	H36.A, H36.B
B	M	Nov. 25	Flexural Stresses in Beams	12.A	H37.A, H37.B
B	W	Nov. 27	**THANKSGIVING**		
37	F	Nov. 29	**THANKSGIVING**		
38	M	Dec. 2	Second Moments of Area: By Composite Parts	12.B	H38.A, H38.B
39	W	Dec. 4	Second Moments of Area: By Integration	12.B, D	H39.A, H39.B
R	F	Dec. 6	**Review for Final Exam**	Ch. 1-12	Practice Exams
E			**FINAL EXAM (details to be announced); (Covers Lectures 1-39)**		

Coding: Integer = Lecture number; B = Break; E = Exam; R = Review lecture.
Homework numbers correspond to lecture numbers. Review lectures do not increase counter. Homework is due the class period after it is assigned.

TEXTS
ME 270 textbook ("Statics: A Lecturebook", 2nd Edition, Fall 2019).

ME 270 BLOG
You will automatically be added to the blog once you have registered for ME 270. Once you have access to the blog, you can adjust your email settings to receive all, some or none of the posting, as according to your preference.

Lec12 09/16/2019 (Mon.)

DISTRIBUTED LOADS

★ Recall Lec 6: equivalent system { resultant force. ✓ / resultant moment. ✓

Learning Objectives

1). To determine the *resultant* of a given distributed *line load* and to evaluate the *support reactions* acting on the body that carries such a load.

2). To do an *engineering estimate* of the equivalent load and its location.

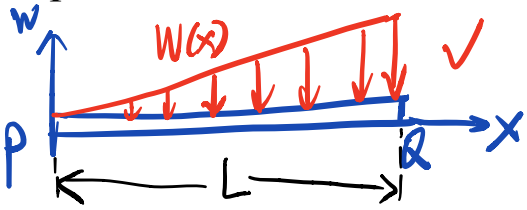

Distributed Parallel "Line" Loads

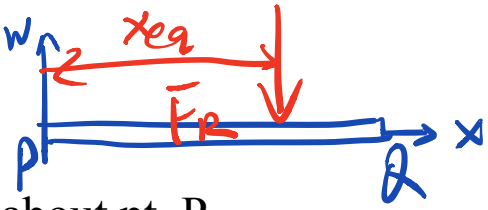

① $F_R = \int_o^L w(x)\,dx$ = Resultant Force

② ★ $M_{R_P} = \int_o^L x\ w(x)dx$ = Resultant Moment about pt. P

③ $x_{eq} = \dfrac{\int_o^L x\ w(x)\,dx}{\int_o^L w(x)\,dx} = \dfrac{M_{R_P}}{F_R}$ = Line of action for equivalent force

Note:

- F_R = area under the curve, $w(x)$
- x_{eq} = centroid of the area under the curve, $w(x)$
- Determine direction of F_R and M_{R_P} by inspection
- Use your intuition to check your answer.

Proof:

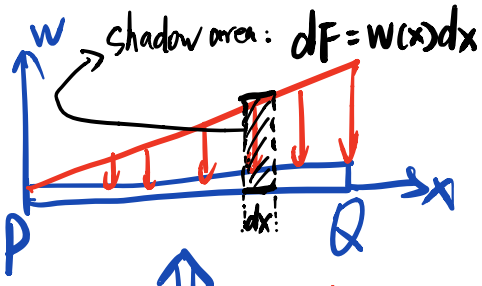

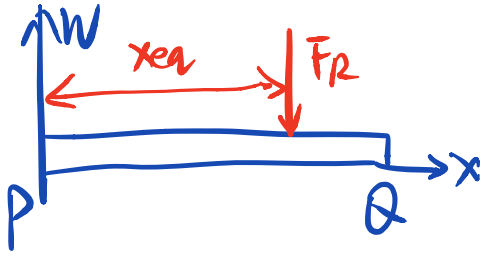

$w(x)$ — force per unit length. (force density)

[unit : N/m]

(magnitude) $F_R = \int dF = \int_0^L w(x)\,dx$

(magnitude) $M_{R_P} = \int x\,dF = \int_0^L x\,w(x)\,dx$

x: arm of each "dF"; dF: Force segment

$$x_{eq} = \frac{M_{R_P}}{F_R}$$

Manager of Syracuse's Carrier Dome worries about its roof with every snowstorm that's predicted

Published: Tuesday, December 14, 2010, 6:00 AM

By Mike Waters / The Post-Standard

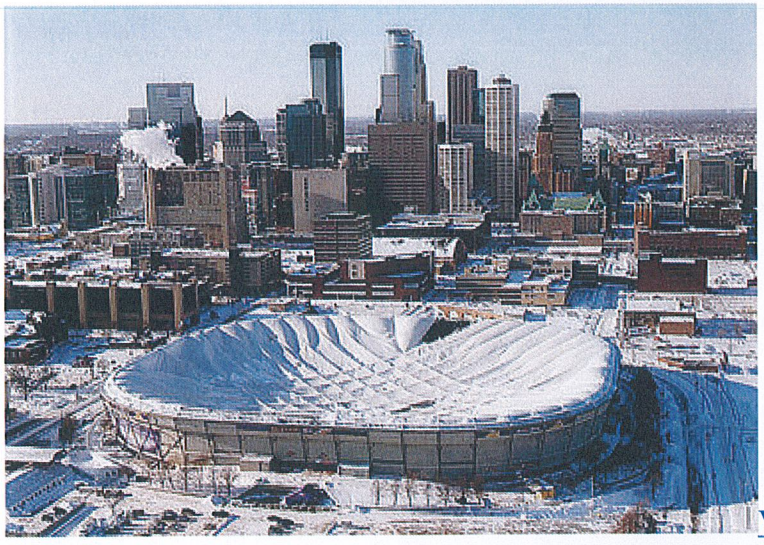

View full sizeAnn Heisenfelt / APThe collapsed roof of the Metrodome is shown in this aerial view of Minneapolis on Sunday. The inflatable roof of the Metrodome collapsed Sunday after a snowstorm that dumped 17 inches on the city.

Syracuse, NY -- The impact of the Metrodome's roof collapse hit Pete Sala as hard as if 2 feet of snow had just been dumped in his own living room.

Sala, the managing director of Syracuse University's Carrier Dome, is close friends with Steve Maki, his counterpart with the Metrodome in Minneapolis. Sala was invited to the wedding of Maki's daughter. Sala sought Maki's counsel while preparing for the monster truck show at the Carrier Dome in March.

"It's our worst nightmare," Sala said of the Metrodome's collapse under 2 feet of snow early Sunday morning. "Those guys are going through hell right now."

Sala and Maki oversee the only working facilities in the United States with Teflon-coated Fiberglas, lattice-cabled roof systems. The two domes were built within two years of each other in 1980 and 1981.

"I told Steve, 'Anything you need, anything I can do, just ask,' " Sala said. Sala's offer included extra Fiberglas panels left over from the Carrier Dome's old roof, which was replaced in 1999, and key members of his staff to aid in the repair of the Metrodome's roof. On Monday, Sala and his staff loaded three old roof panels onto a Greater Syracuse Moving and Storage truck bound for Minneapolis.

The video of the Metrodome's collapse looks like a bag of sugar splitting open and the contents spilling everywhere.

"They had a major tear and the roof deflated," Sala said. "What you're seeing when you watch the video is as the roof is deflating and it goes into the inverted position, you get a huge avalanche of snow. The lowest point of the roof is going to take that impact. At that speed, something's got to give."

The Metrodome's roof sustained damage to one triangle- and two diamond-shaped panels. The triangle represents one of the largest panels in the roof.

The Carrier Dome's roof covers 6.5 acres compared to the 10-acre Metrodome roof. The Carrier Dome's 64 Teflon-coated fiberglass panels spread out over 287,000 square feet. The roof consists of 36 diamond panels in the center, 24 rectangles and four triangles.

Sala said what happened in Minnesota could just as easily happen in Syracuse. "I've been telling everybody at the university," said Sala, "you're as vulnerable as the next big snowstorm."

A major snowstorm walloped the Central New York region just last week, dumping roughly 4 feet of snow on Syracuse over the course of four days. "I didn't sleep from Sunday night to Thursday," Sala said. "You get so stressed out, it's just incredible. It's a nightmare."

Avoiding a tear in the roof and the resulting collapse starts before the snow starts to fly. The formula, said Sala, starts with pumping air heated to 140 degrees into the space between the Dome roof's two layers a day ahead of any storm.

Airport scrambles to remove ice after canopy collapse

Posted: Feb 07, 2011 12:43 PM EST Updated: Feb 07, 2011 4:37 PM EST

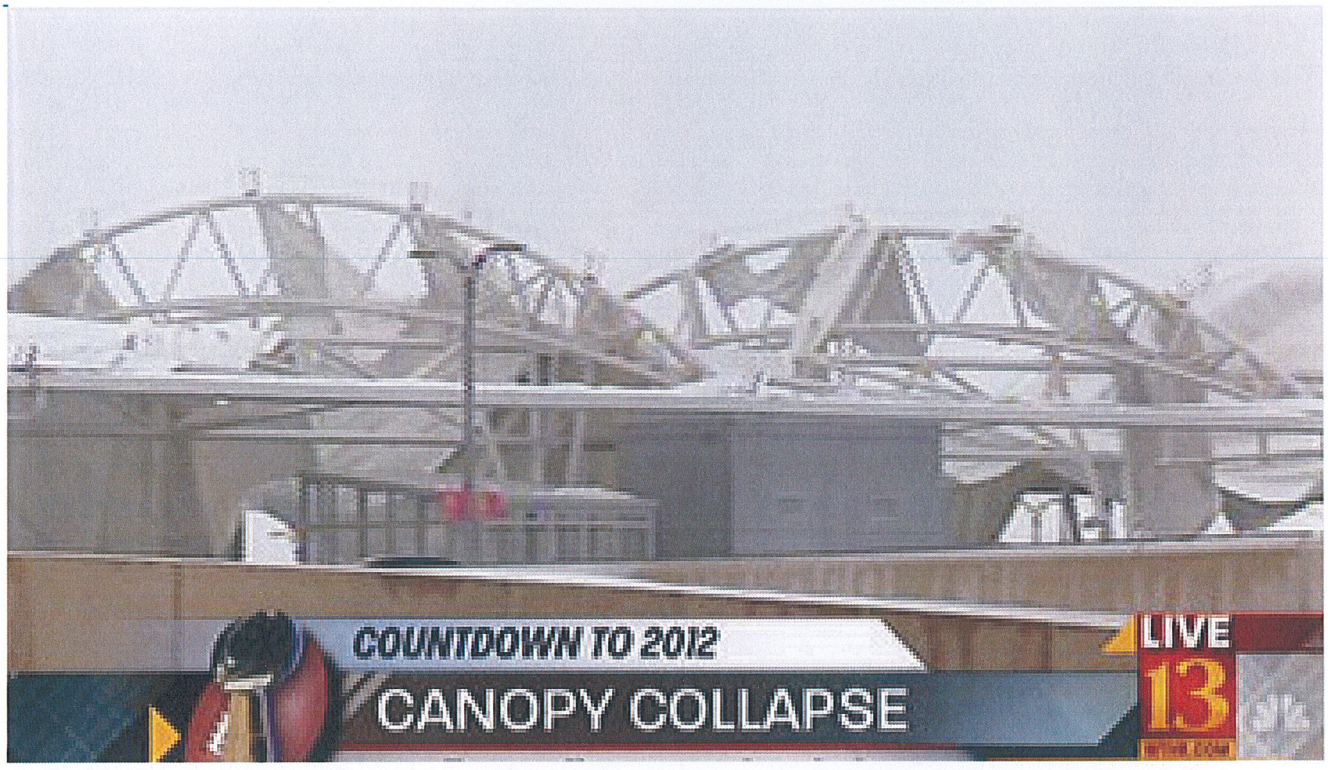

Crews are busy removing ice from the remaining panels.

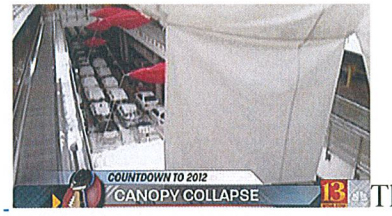

This picture shows the damaged cars in the background.

Kris Kirschner/Eyewitness News

Example 5.D.1

Given: A distributed loading acts over the top surface of the beam with a line load of $w(x) = 160x$ (with x in m and w in N/m).

Find: For this loading: a load that results in equivalent force & moment to $w(x)$ on the beam.

(a) Estimate the equivalent load and its location on the beam.

(b) Calculate the magnitude and location (from the left end of the beam) of the equivalent resultant of this loading.

Use the following parameter value in your analysis: $L = 9$ m.

$$F_R = \int_0^L 160x\,dx$$

$$= \left[80x^2\right]_0^9 = \boxed{6480\text{ N}}$$

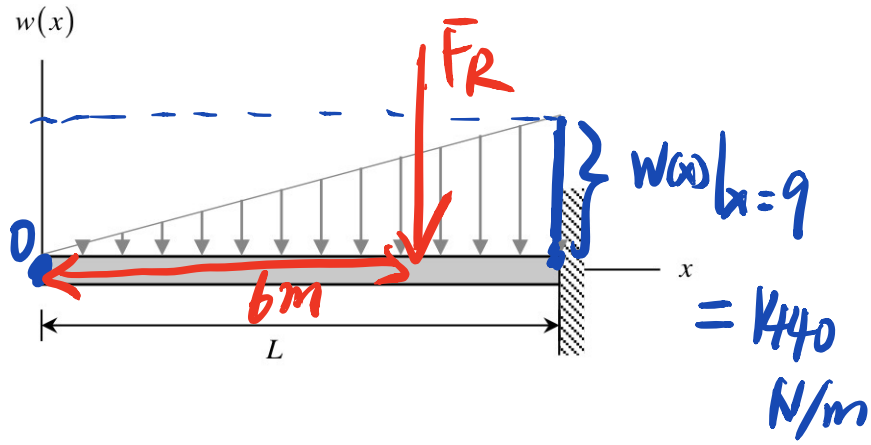

$$M_{R,0} = \int_0^L (x)(160x)\,dx$$

$$= \left[\frac{160}{3}x^3\right]_0^9 = 38880\text{ Nm} = F_R \cdot x_{eq}$$

$$\Rightarrow x_{eq} = \frac{M_{R,0}}{F_R} = \boxed{6\text{ m.}}$$

Alternative method (Short cut for specific shapes: e.g. △, ▨, ▨, ●)

F_R — area under the curve

$$F_R = S_\Delta = \frac{1}{2} L\, w(x)\big|_{x=9} = \frac{1}{2}(9)(1440) = \boxed{6480\text{ N}}$$

x_{eq} — centroid of the shape (triangle in this case)

$$\boxed{x_{eq} = \frac{2}{3}L = 6\text{ m}}$$

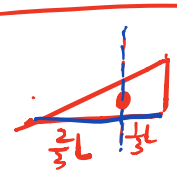

centroid of a triangle. (memorize!)

Example 5.D.2 - Solved

Given: Granular material resting on a cantilevered support exerts the line load shown below in the support.

Find: For this loading:

(a) Calculate the magnitude and location (from the left end of the support) of the equivalent resultant of this loading.

(b) Calculate the reactions on the beam at end A.

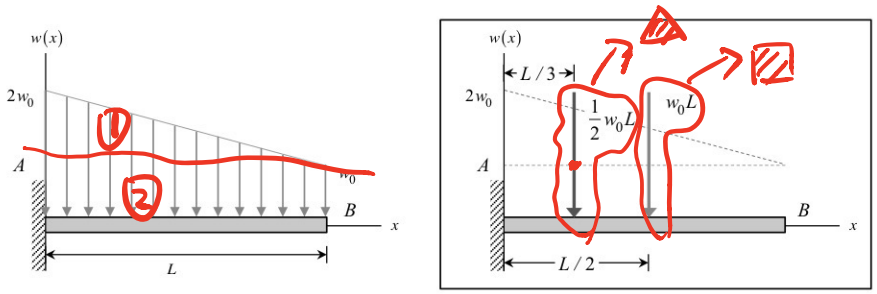

Equivalency of loadings

System I is made up of two single-force equivalents of triangular- and rectangular-shaped line loads. System II is the single-force equivalent of this pair of forces. Through equivalency, we have:

$$\left(\sum F_y\right)_{II} = \left(\sum F_y\right)_{I} \Rightarrow R = \frac{1}{2}w_0 + w_0 L = \frac{3}{2}w_0 L$$

$$\left(\sum M_A\right)_{II} = \left(\sum M_A\right)_{I} \Rightarrow RD = \left(\frac{L}{3}\right)\left(\frac{1}{2}w_0\right) + \left(\frac{L}{2}\right)\left(w_0 L\right) = \frac{2}{3}w_0 L^2 \Rightarrow D = \frac{2w_0 L^2/3}{3w_0 L/2} = \frac{4}{9}L$$

Equilibrium – from FBD above:

$$\sum M_A = -M - RD = 0 \Rightarrow M = -RD = -\frac{2}{3}w_0 L^2$$

$$\sum F_y = A_y - R = 0 \Rightarrow A_y = \frac{3}{2}w_0 L$$

Example 5.D.3

Given: Wind has blown sand over a doubly-cantilevered platform such that the distributed load of the sand weight on the platform can be approximated by the function $w(x) = 0.5x^3$ (with x in m and w in N/m).

Find: For this loading:
(a) Estimate the equivalent load and its location on the platform (as measured from the left end).
(b) Calculated the equivalent load and its location on the platform (as measured from the left end).

Use the following parameter value in your analysis: $L = 10$ m.

$$F_R = \int_0^L w(x)\,dx$$

$$= \int_0^{10} 0.5x^3\,dx$$

$$= \left[\frac{x^4}{8}\right]_0^{10} = 1250\ \text{N}$$

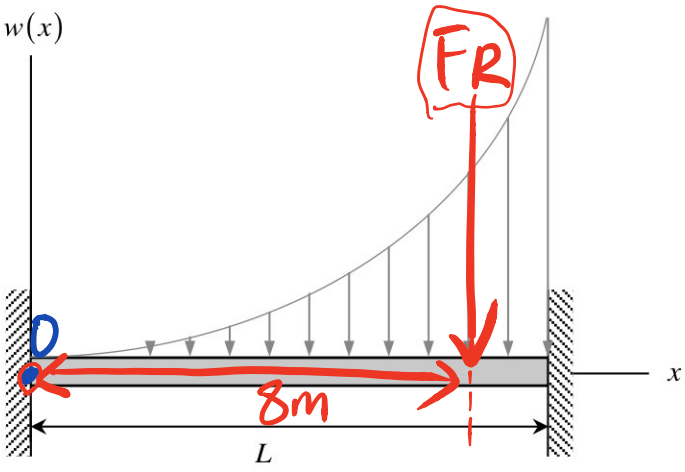

$$M_{R,O} = F_R\, x_{eq} = \int_0^{10} (0.5x^3)(x)\,dx = \left[\frac{x^5}{10}\right]_0^{10} = 10000\ \text{Nm}$$

$$\Rightarrow x_{eq} = \frac{M_{R,O}}{F_R} = 8\text{m}$$

Example 5.D.4

Given: The angled bar shown below is loaded with a distributed line load $w(x) = w_0 + kx^2$ and a concentrated load F. The bar is supported by a pin joint at B and a roller support at A.

Find: For this loading:

(a) Estimate and then compute the force and the location of the single-force equivalent for the distributed load.

(b) Draw a free body diagram of the bar.

(c) Estimate the reactions at supports A and B.

(d) Calculate the reactions at supports A and B.

Use the following parameter values in your analysis: $b = 0.4$ m, $c = 1.4$ m, $d = 0.6$ m, $h = 0.5$ m, $W = 2$ kN/m and $F = 4$ kN.

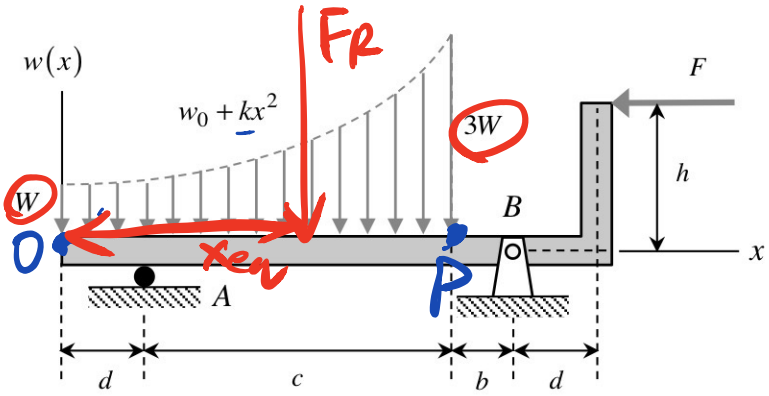

(a) $w(x)|_{x=0} = w_0 = 2$

$w(x)|_{x=2} = w_0 + 4k = 6$

$\Rightarrow \begin{cases} w_0 = 2 \\ k = 1 \end{cases} \Rightarrow w(x) = x^2 + 2$

$$F_R = \int_0^{c+d} w(x)\,dx = \int_0^2 x^2 + 2\,dx = \left[\frac{x^3}{3} + 2x\right]_0^2$$

$$= 6.67 \text{ kN}$$

$$M_{R,O} = \int_0^{c+d} x\,w(x)\,dx = \int_0^2 x^3 + 2x\,dx = \left[\frac{x^4}{4} + x^2\right]_0^2$$

$$= 8 \text{ kN·m}$$

$$x_{eq} = \frac{M_{R,O}}{F_R} = 1.2\ m$$

(b)

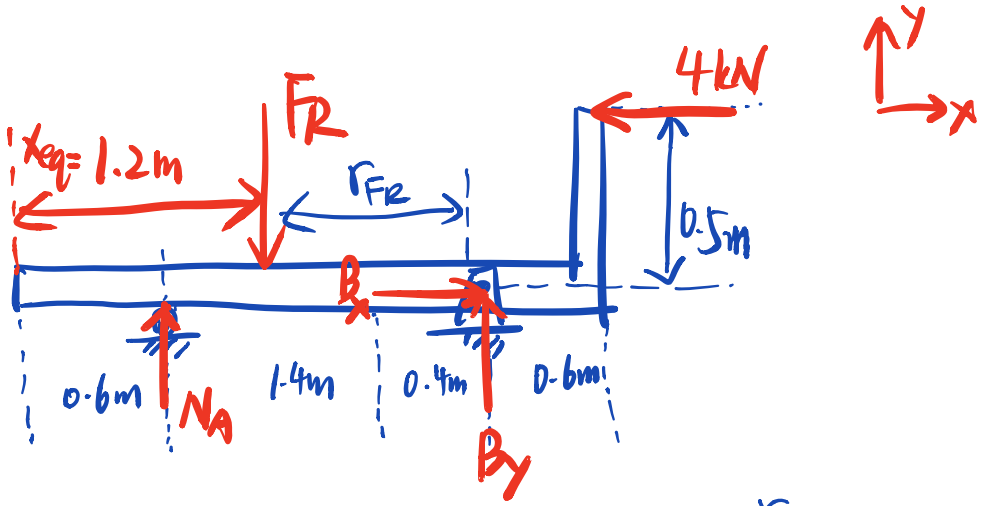

$$\Sigma M_B = 0 = -N_A(1.8) + F_R(\underbrace{0.6+0.4+1.4-1.2}_{r_{FR}}) + 4(0.5)$$

$$\Rightarrow N_A = 5.56\ kN$$

$$\Sigma F_x = 0 = B_x - 4 \Rightarrow B_x = 4\ kN$$

$$\Sigma F_y = 0 = -F_R + N_A + B_y \Rightarrow B_y = 1.11\ kN$$

$$\Rightarrow \boxed{\begin{aligned} \bar{A} &= 5.56\,\bar{j}\ kN \\ \bar{B} &= 4\,\bar{i} + 1.11\,\bar{j}\ kN \end{aligned}}$$

Example 5.D.5

Given: A beam experiences the line loading shown.

Find: For this loading: ↗ How to split the shape

(a) Replace each distributed load on the beam with an equivalent single-force equivalent point load. Identify the magnitude and direction of each equivalent load and its point of application on the beam.

(b) Combine the equivalent point loads above into a single equivalent load, and determine its point of application. How to combine those F_R's to solve for overall "x_{eq}"

Use the following parameter values in your analysis: $d = 4$ ft, $b = 3$ ft, $w_1 = 100$ lb/ft and $w_2 = 300$ lb/ft.

Recall Example 5.D.2

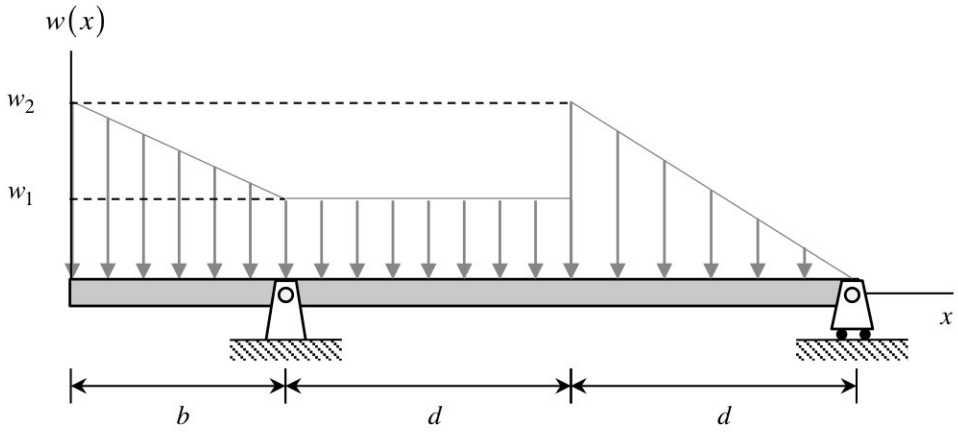

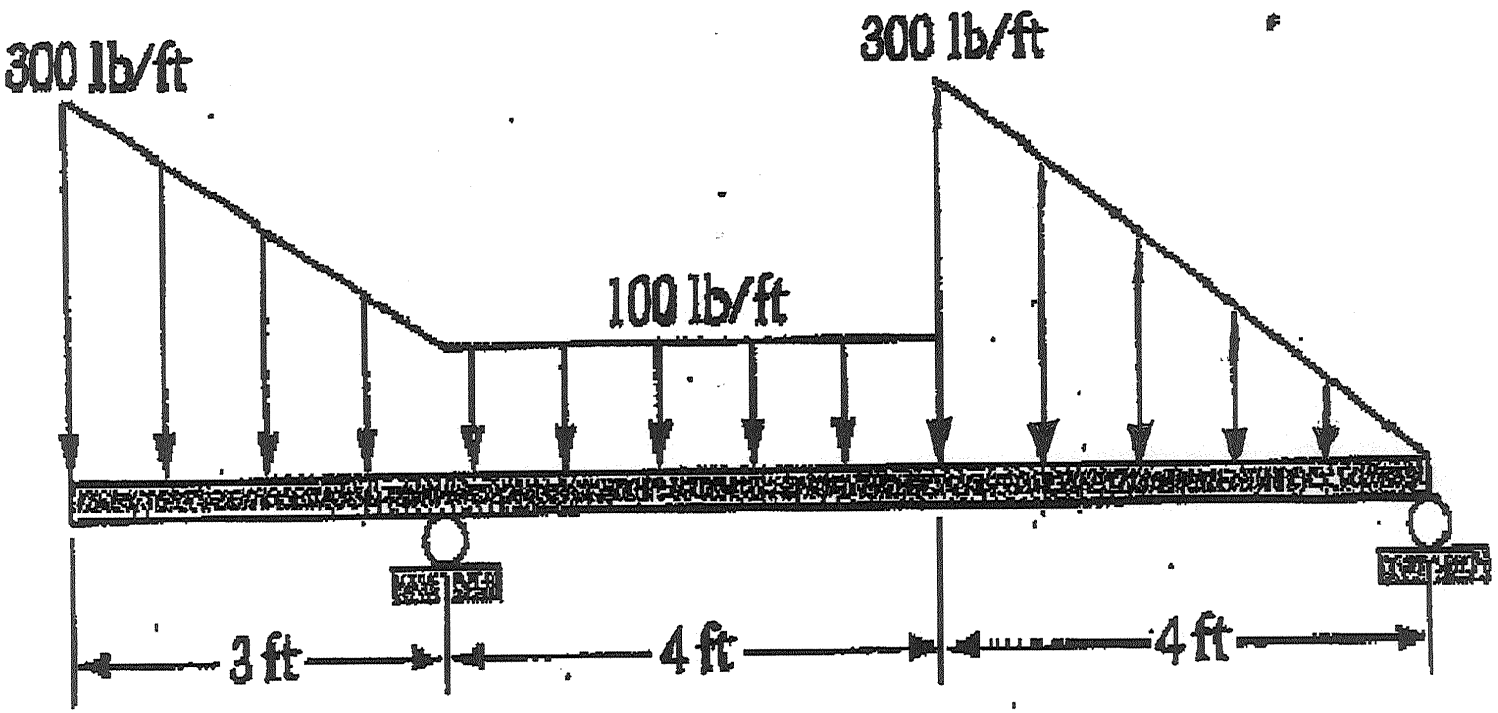

Figure P3.155

ME 270 – Basic Mechanics I – Group Quiz

Your Name: SOLUTION Group Members: 1) _____

Date: _____ Period: _____ 2) _____

3) _____

4) _____

Given: The given beam is loaded as shown. Note the triangular loading at the end of the beam is in the "upward" direction.

Find: a) Replace the distributed loading on the beam with an equivalent set of point loads and identify the location and direction of each of the point loads.

b) Combine the set of point loads into a single equivalent point load and determine the point of application along the beam.

Solution:

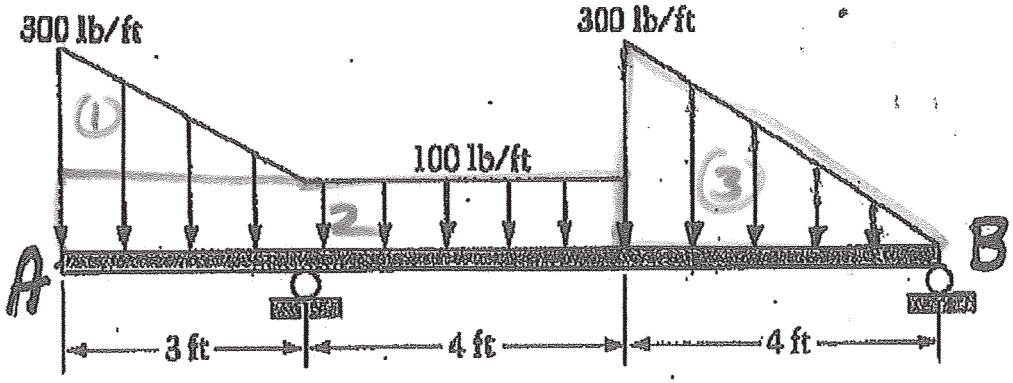

Figure P3.155

a) $F_1 = \frac{1}{2}(3)(200) = 300\,lb$ @ $x = 2\,ft$

$F_2 = (7)(100) = 700\,lb$ @ $x = 3.5\,ft$

$F_3 = \frac{1}{2}(4)(300) = 600\,lb$ @ $x = 7 + \frac{4}{3}\,ft$

$x = 8.33\,ft$

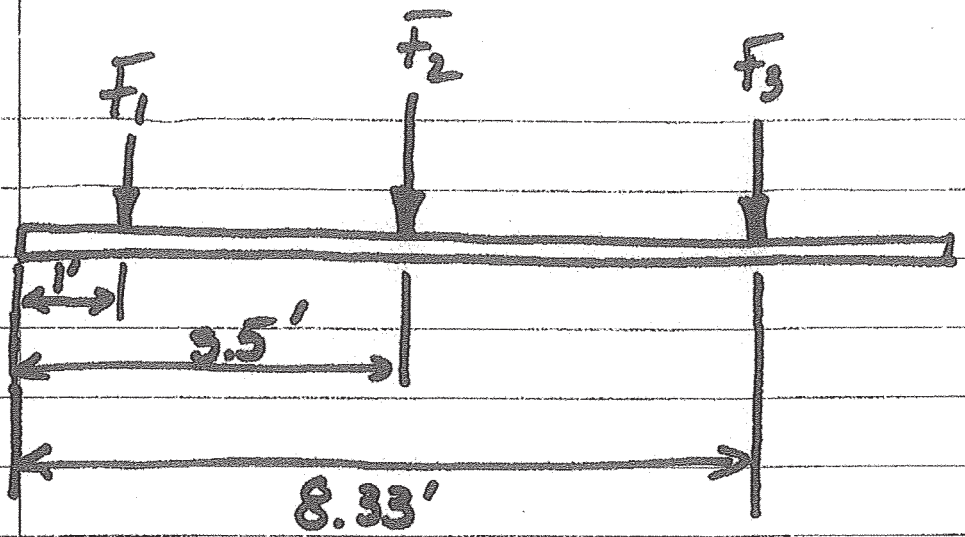

$$\bar{R} = \bar{F}_1 + \bar{F}_2 + \bar{F}_3$$

$$\bar{R} = -300\bar{j} - 700\bar{j} - 600\bar{j} = -1600\bar{j}\ \text{lb.}$$

$$R(x) = F_1(x_1) + F_2(x_2) + F_3(x_3)$$

$$-1600x = -(300)(1) - (700)(3.5) - (600)(8.33)$$
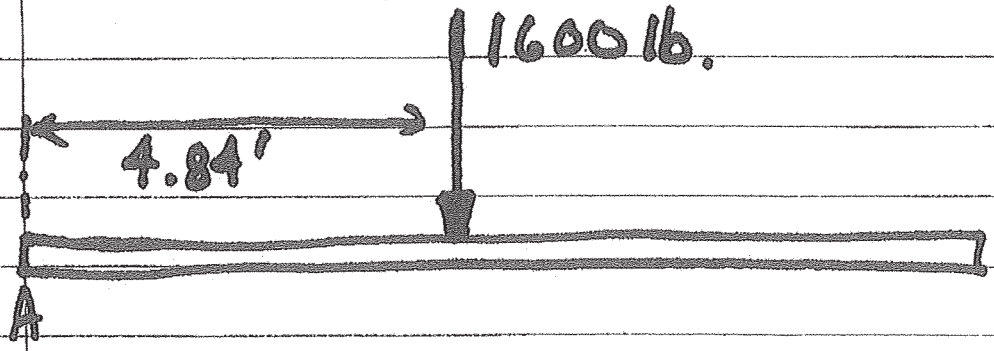
$$\therefore x = 4.84\ \text{ft}$$