Example 15.4

A crank is fixed to a stationary support at O and is loaded with a force P The crank has a solid cross section of diameter $d = 1\ in$ and is made of a ductile material with a yield strength of $\sigma_Y = 100\,ksi$. A factor of safety of $FS = 2.5$ was used in the design of the crank.

Using the *maximum shear stress* theory, what is the maximum load P allowed?

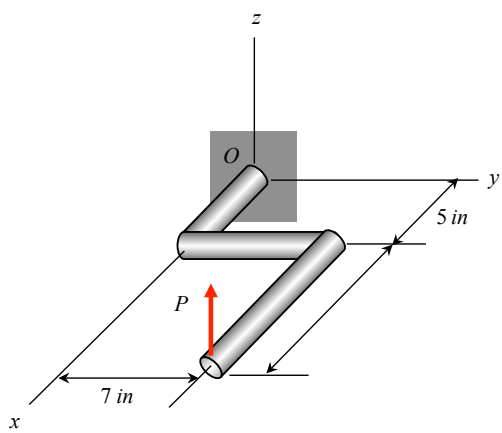

SOLUTION

<u>*Equilibrium*</u>

$$\sum \vec{M}_A = 7P\hat{i} - 14P\hat{j} - T\hat{i} + M\hat{j} = \vec{0} \quad \Rightarrow$$

$$\hat{i}: \quad M = 14P$$

$$\hat{j}: \quad T = 7P$$

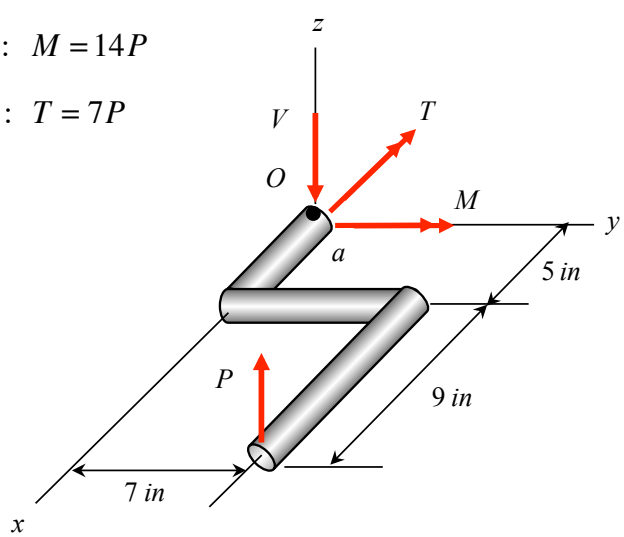

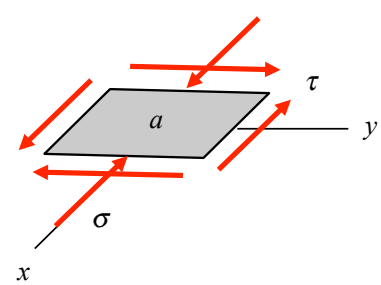

<u>*Stress element*</u> (look at stress element on top face of bar at point "a")

For this loading (no shear stress from bending at "a" – why?):

$$\sigma = \frac{M(d/2)}{I} = \frac{7Pd}{I}$$

$$\tau = \frac{T(d/2)}{J} = \frac{7Pd}{2J}$$

where:

$$I = \frac{\pi}{64} d^4$$

$$I_P = \frac{\pi}{32} d^4 = 2I$$

Therefore:

$$\tau = \frac{7Pd}{2(\pi d^4/32)} = \frac{112P}{\pi d^3}$$

$$\sigma = \frac{7Pd}{\pi d^4/64} == \frac{448P}{\pi d^3} = 4\tau$$

Stress transformation/Mohr's circle

From the above state of stress:

$$\sigma_{ave} = -\frac{\sigma}{2} = -224\frac{P}{\pi d^3}$$

$$R = \sqrt{\left(\frac{\sigma}{2}\right)^2 + \tau^2} = \sqrt{\left(\frac{224P}{\pi d^3}\right)^2 + \left(\frac{112P}{\pi d^3}\right)^2} = 250.4\frac{P}{\pi d^3}$$

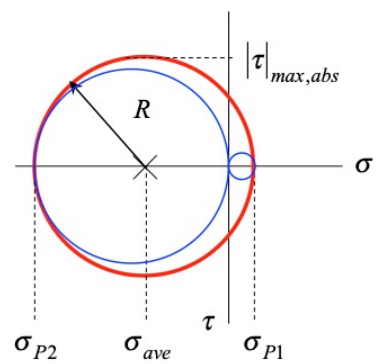

Therefore:

$$\sigma_{P1} = \sigma_{ave} + R = (-224 + 250.4)\frac{P}{\pi d^3} = 26.4\frac{P}{\pi d^3}$$

$$\sigma_{P2} = \sigma_{ave} - R = (-224 - 250.4)\frac{P}{\pi d^3} = -474.5\frac{P}{\pi d^3}$$

Since σ_{P1} and σ_{P2} are of opposite signs, then $|\tau|_{\max,abs} = |\tau|_{\max,in-plane} = R$ (see figure):

$$|\tau|_{max,abs} = R = 250.5\frac{P}{\pi d^3}$$

Therefore:

$$FS_S = \frac{\sigma_Y}{2|\tau|_{max,abs}} = \frac{100(10^3)}{(2)(250.5)}\frac{\pi d^3}{P} = 200\frac{\pi d^3}{P} \quad \Rightarrow$$

$$P = 200\frac{\pi d^3}{FS_S} = 200\frac{\pi(1)^3}{2.5} = 251\,lb$$