ME 274: Basic Mechanics II

Lecture 12: Moving Reference Frame Kinematics

PURDUE UNIVERSITY | School of Mechanical Engineering

Announcements

Exam 1 info:

- Exam 1, Thurs. 2/12, 8 – 9:30, MA 175
- Students with exam accommodations: HIKS G980D, 6:30PM – reminder to email Dr. Krousgrill
- Exam review session Tuesday 2/10, 7pm over Zoom (link on course website on "Exams" page)

Homework and class updates:

- No class Friday, 2/13 to account for evening exam
- HW released today (2.C, 2.D) **due Friday 2/13**
- HW released on Wednesday (2.E, 2.F) **due Monday 2/16**
- **Reminder to use correct HW formatting!**
- Office hrs: T 9-10:30, W 3:30-4:20, Th 3-4:30

Moving Reference Frames – Overview

- Stationary axis ⟶ XYZ axis ⟶ point B as seen by an outside observer
- Moving reference frame ⟶ xyz axis ⟶point B as seen from an observer at point A
- The angular speed of the observer is given by the time rate of change of the angle θ between the fixed and moving reference frame ⟶$\vec{\omega} = \dot{\theta}\hat{k}$

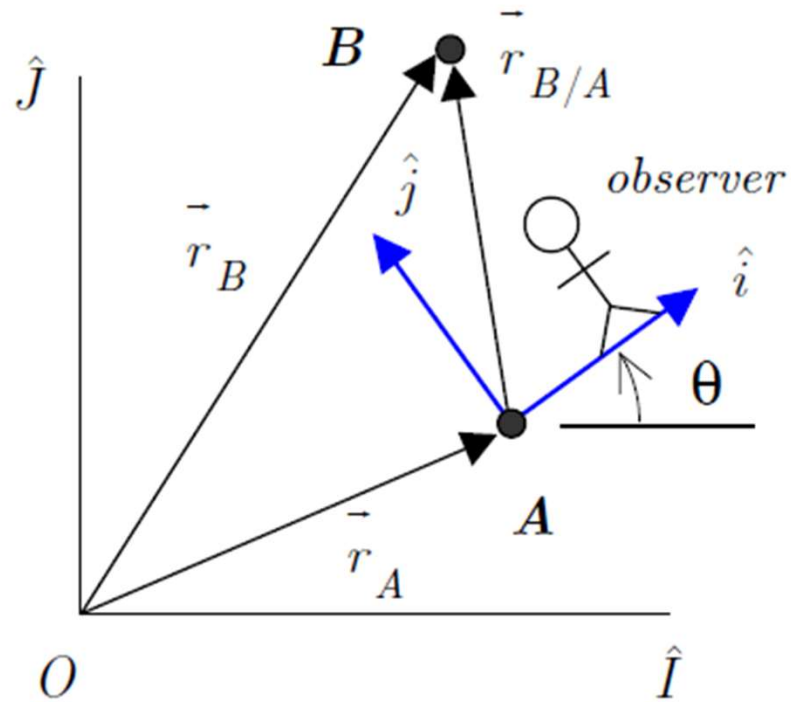

Relating velocity and acceleration of pts. B and A :

$$\vec{v}_B = \vec{v}_A + \left(\vec{v}_{B/A}\right)_{rel} + \vec{\omega} \times \vec{r}_{B/A}$$

$$\vec{a}_B = \vec{a}_A + \left(\vec{a}_{B/A}\right)_{rel} + \vec{\alpha} \times \vec{r}_{B/A} + 2\vec{\omega} \times \left(\vec{v}_{B/A}\right)_{rel} + \vec{\omega} \times \left[\vec{\omega} \times \vec{r}_{B/A}\right]$$

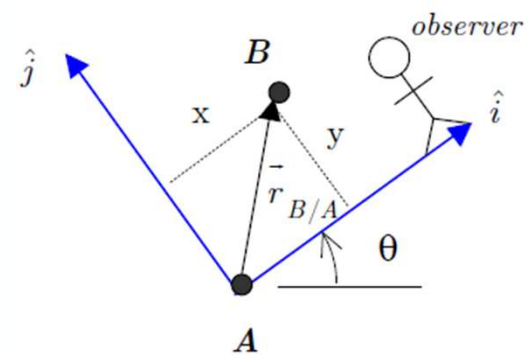

Where $\left(\vec{v}_{B/A}\right)_{rel}$,$\left(\vec{a}_{B/A}\right)_{rel}$ are the velocity and acceleration of point B as observed from A.

Remember pt A must be on the same reference frame as the observer!

The Coriolis Component of Acceleration

- The Coriolis component arises when a point has a nonzero velocity relative to a rotating reference frame.
- Although the point may be moving in a straight line with constant velocity in an inertial frame, the rotating observer sees the direction of that relative velocity continuously change as the reference axes rotate.

Ex 1: Merry-go-round

Motion of P seen by stationary observer

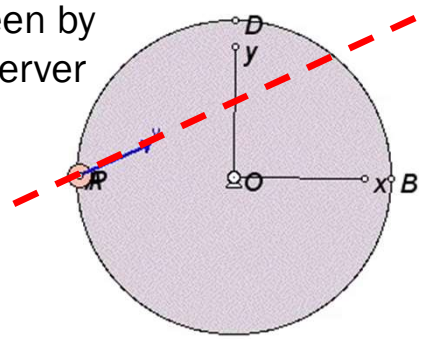

Motion of P seen by moving observer

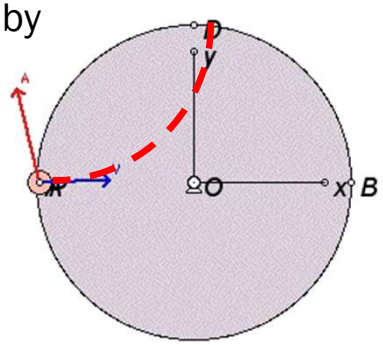

Ex 2: Weather Systems

Question C3.3

Sprinkler arm OA is pinned to a cart at point O. The cart moves to the right with a speed of v_{cart} with $\dot{v}_{cart} = 2$ ft/s^2 = *constant*. Fluid flows through the sprinkler arm at a rate of $\dot{d}$ with $\ddot{d}$ = -3 ft/s^2 = *constant*. The sprinkler arm is being raised at a constant rate of $\dot{\theta} = 4$ rad/s. An observer and xyz coordinate system are attached to the sprinkler arm, as shown in the figure below. The following equation is to be used to find the acceleration of a pellet P that flows with the fluid in the arm:

$$\vec{a}_P = \vec{a}_O + \left(\vec{a}_{P/O}\right)_{rel} + \vec{\alpha} \times \vec{r}_{P/O} + 2\vec{\omega} \times \left(\vec{v}_{P/O}\right)_{rel} + \vec{\omega} \times \left[\vec{\omega} \times \vec{r}_{P/O}\right]$$

Provide numerical values for the following terms when: $d = 3$ ft, $v_{cart} = 3$ ft/s, $\dot{d} = 5$ ft/s and $\theta = 90°$.

$\vec{a}_O =$

$\vec{\omega} =$

$\vec{\alpha} =$

$\left(\vec{v}_{P/O}\right)_{rel} =$

$\left(\vec{a}_{P/O}\right)_{rel} =$

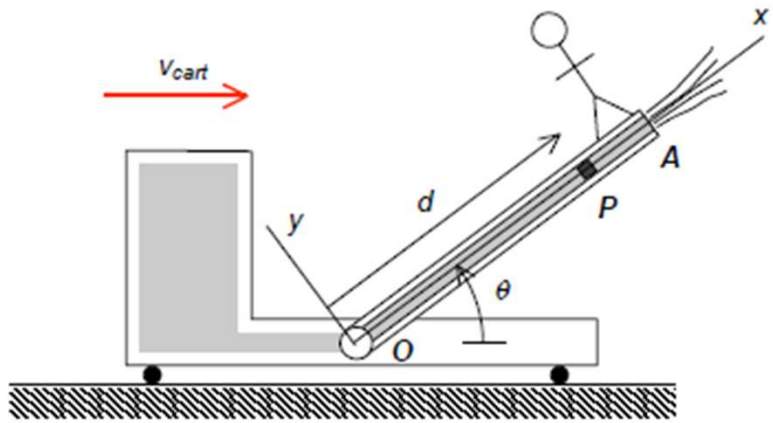

Question C3.2

A disk is pinned to ground at its center O with the disk rotating clockwise at a constant rate of $\Omega = 3$ rad/s. Block P is traveling to the left along a straight path toward O with a constant speed of $v_P = 20$ ft/s. Determine the acceleration of P as seen by an observer on the disk when P is at a distance of 50 ft from O.

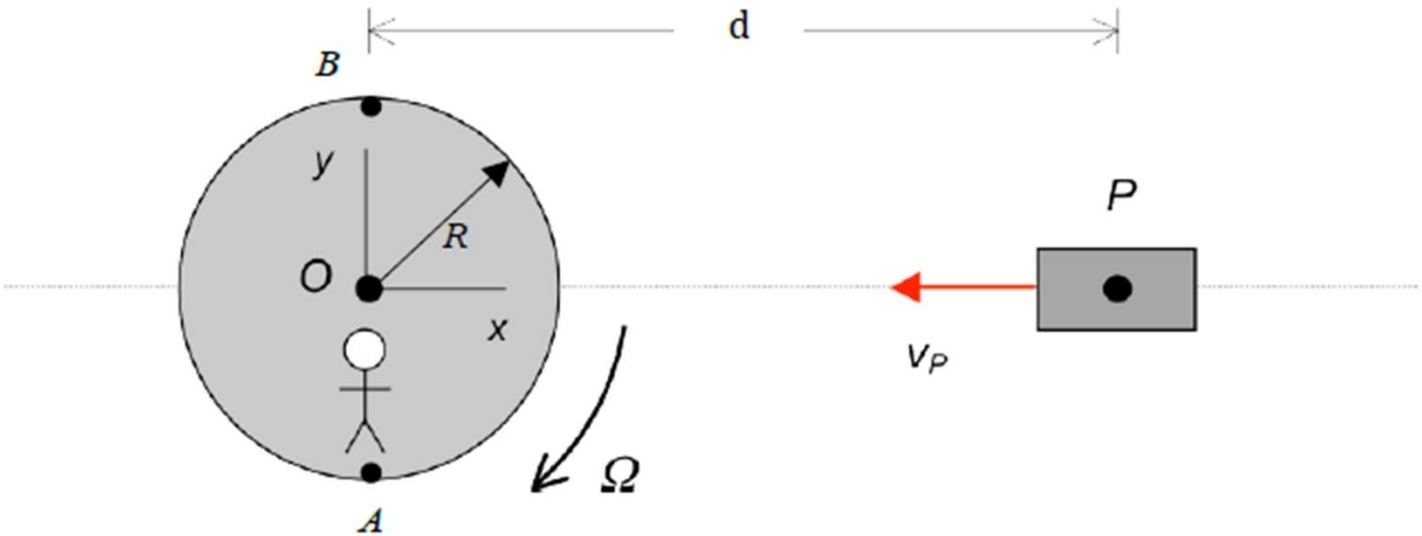

$$\vec{a}_P = \vec{a}_O + \left(\vec{a}_{P/O}\right)_{rel} + \vec{\alpha} \times \vec{r}_{P/O} + 2\vec{\omega} \times \left(\vec{v}_{P/O}\right)_{rel} + \vec{\omega} \times \left[\vec{\omega} \times \vec{r}_{P/O}\right]$$

Example 3.A.5

Given: The mechanism shown below is made up of links OA and BC. Links OA and BC are pinned to ground at points O and C, respectively. Pin A of link OA is able to slide within a slot that is cut in link BC, as shown. Pins O and C are on the same horizontal line. Let the xyz axes be attached to link BC. At the instant shown:

- Link BC is vertical with $L = 400$ mm; and
- Link BC is rotating counterclockwise at a rate of $\omega = 6$ rad/s.

Find: Determine:

(a) The angular velocity of link OA at the instant shown; and
(b) The value for $\dot{L}$ at the instant shown.

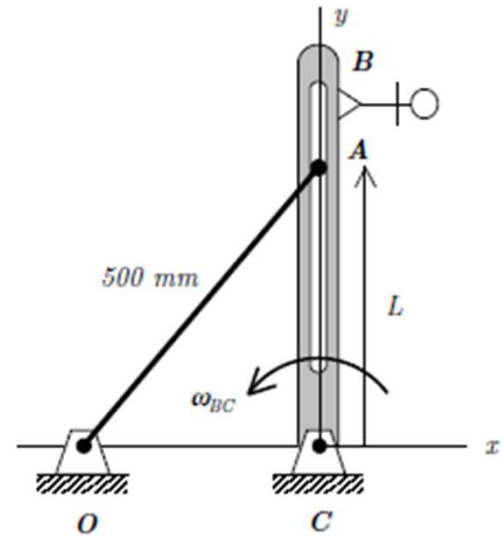

Example 3.A.7

Given: The disk rolls without slipping to the right with a constant angular speed of ω_d. At the instant shown, pin P is directly above the center A of the disk.

Find: Determine:

(a) The angular acceleration of the disk; and

(b) The acceleration of P as seen by an observer on arm BD.
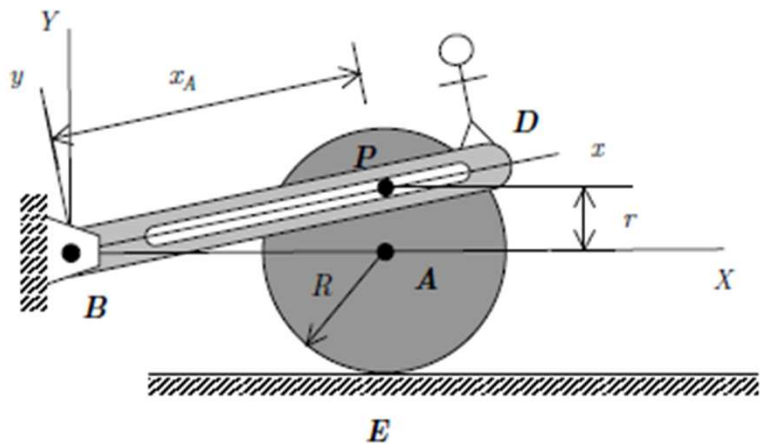
Use the following parameters in your analysis: $\omega_d = 20$ rad/s (clockwise), $x_A = 0.48$ m, $r = 0.14$ m and $R = 0.2$ m.