Visualization of coordinate system rotating with 2 components.

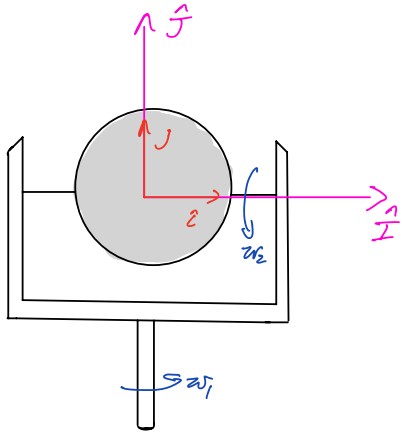

- The $\hat{I}, \hat{J}, \hat{K}$ unit vectors are fixed
- The $\hat{i}, \hat{j}, \hat{k}$ unit vectors rotate with $\vec{\omega} = \omega_1 \hat{J} + \omega_2 \hat{i}$

How do we interprete? We can visualize by considering individual rotations around $\hat{J}$ and $\hat{i}$. Lets pretend ω_1 is applied then ω_2.

① Original Orientation

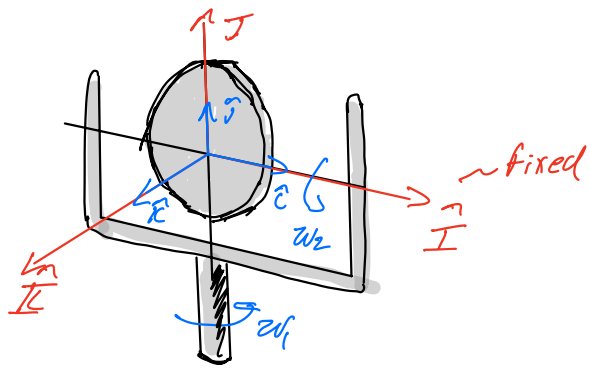

② Rotation about I axis or ω_1 only

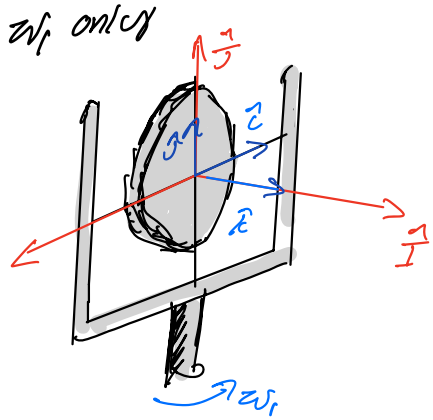

③ Now, consider rotation about x axis or ω_2 only

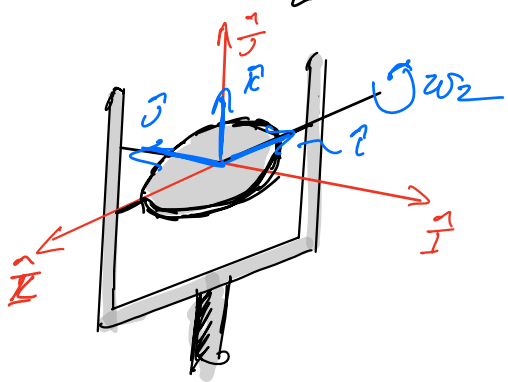

This is just a visualization in reality ω_1 and ω_2 happen at the same time

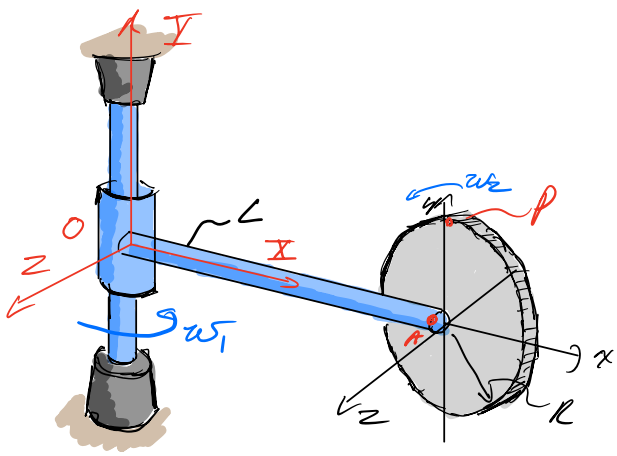

Find $\vec{v}_P$ and $\vec{a}_P$.

X, Y Z are global fixed axis.

Let's look at two ways we can have the coordinate system: 1) xyz fixed to rod OA, and 2) xyz fixed in disk

1

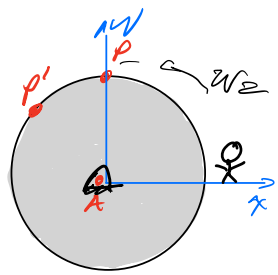

The observer sees point P move to P'

xyz – fixed in OA

Define $\vec{\omega}$ and $\vec{\alpha}$ of xyz system

$\vec{\omega} = \omega_1 \hat{j}$

$\vec{\alpha} = \frac{d\vec{\omega}}{dt} = \cancel{\dot{\omega}_1 \hat{j}}^{\,0} + \omega_1 \cancel{\dot{\hat{j}}}^{\,0} = 0$

Find $\vec{v}_P$

$\vec{v}_P = \vec{v}_A + (v_{P/A})_{rel} + \vec{\omega} \times \vec{r}_{P/A}$

Now, we need $\vec{v}_A$, we can use the fixed coordinate system

$\vec{v}_A = \vec{v}_O + \vec{\omega}_{OA} \times \vec{r}_{O/A}$

2

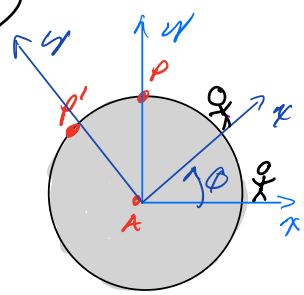

The observer does not see point P moving

xyz – fixed in disk

Define $\vec{\omega}$ and $\vec{\alpha}$ of xyz system

$\vec{\omega} = \omega_1 \hat{j} + \omega_2 \hat{k}$

$\vec{\alpha} = \cancel{\dot{\omega}_1 \hat{j}}^{\,0} + \omega_1 \cancel{\dot{\hat{j}}}^{\,0} + \cancel{\dot{\omega}_2 \hat{k}}^{\,0} + \omega_2 \cancel{\dot{\hat{k}}}^{\,\vec{\omega} \times \hat{k}}$

$\vec{\alpha} = \omega_2 (\omega_1 \cancel{\hat{j}}^{\,0} + \omega_2 \hat{k}) \times \hat{k} = \omega_1 \omega_2 \hat{i}$

Find $\vec{v}_P$

$\vec{v}_P = \vec{v}_A + (v_{P/A})_{rel} + \vec{\omega} \times \vec{r}_{P/A}$

Now, we need $\vec{v}_A$, we can use the fixed coordinate system

$\vec{v}_A = \vec{v}_O + \vec{\omega}_{OA} \times \vec{r}_{O/A}$

$\vec{v}_O = \vec{0}$, $\vec{\omega}_{OA} = \omega_1 \hat{j}$, $\vec{r}_{O/A} = L\hat{I}$

$$\vec{v}_P = \underbrace{\cancel{\vec{v}_O}}_{0} + \underbrace{\cancel{\vec{\omega}_{OA}}}_{\omega_1\hat{j}} \times \underbrace{\cancel{\vec{r}_{O/A}}}_{L\hat{I}} = \omega_1 \hat{j} \times L\hat{I}$$

$$\vec{v}_P = -L\omega_1 \hat{k}$$

The analysis is the same up to this point.

Back to

$$\vec{v}_P = \vec{v}_A + (\vec{v}_{P/A})_{rel} + \vec{\omega} \times \vec{r}_{P/A}$$

identify each term

$$\vec{v}_A = -L\omega_1 \hat{k}$$

$$\vec{\omega} = \omega_1 \hat{j}$$

$$\vec{r}_{P/A} = R\hat{j}$$

We need to find $(\vec{v}_{P/A})_{rel}$.

Here we are going to fix point A and treat the disk as a rigid body.

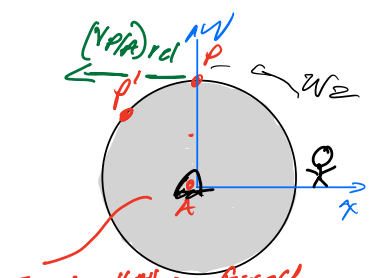

The observer sees point P move to P'

Imagine "A" is fixed

xyz – fixed in OA

Find $(\vec{v}_{P/A})_{rel}$ using a modified form of RB equations

$$(\vec{v}_{P/A})_{rel} = (\vec{v}_A)_{xyz} + \vec{\omega}_2 \times \vec{r}_{P/A}$$

$(\vec{v}_A)_{xyz}$ = velocity of point A in xyz system, it is "0".

$\vec{v}_O = \vec{0}$, $\vec{\omega}_{OA} = \omega_1 \hat{j}$, $\vec{r}_{O/A} = L\hat{I}$

$$\vec{v}_P = \underbrace{\cancel{\vec{v}_O}}_{0} + \underbrace{\cancel{\vec{\omega}_{OA}}}_{\omega_1\hat{j}} \times \underbrace{\cancel{\vec{r}_{O/A}}}_{L\hat{I}} = \omega_1 \hat{j} \times L\hat{I}$$

$$\vec{v}_P = -L\omega_1 \hat{k}$$

The analysis is the same up to this point.

Back to

$$\vec{v}_P = \vec{v}_A + (\vec{v}_{P/A})_{rel} + \vec{\omega} \times \vec{r}_{P/A}$$

identify each term

$$\vec{v}_A = -L\omega_1 \hat{k}$$

$$\vec{\omega} = \omega_1 \hat{j} + \omega_2 \hat{k}$$

$$\vec{r}_{P/A} = R\hat{j}$$

We need to find $(\vec{v}_{P/A})_{rel}$.

In this coordinate system $(\vec{v}_{P/A})_{rel} = \vec{0}$. The observer doesn't see point P move.

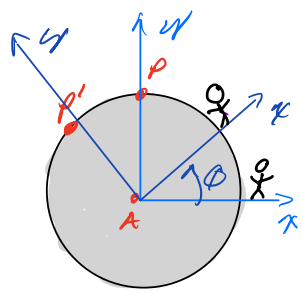

The observer does not see point P moving

xyz – fixed in disk

Plug in . . .

$$\vec{v}_P = \vec{v}_A + (\vec{v}_{P/A})_{rel} + \vec{\omega} \times \vec{r}_{P/A}$$

$$= -L\omega_1 \hat{k} + \vec{0} + (\omega_1 \hat{j} + \omega_2 \hat{k}) \times R\hat{j}$$

$$\vec{v}_P = -L\omega_1 \hat{k} - R\omega_2 \hat{i}$$

$$\vec{v}_P = -R\omega_2 \hat{I} - L\omega_1 \hat{k}$$ Ans

$\vec{\omega}_2 = \omega_2 \hat{k}$ and $\vec{r}_{P/A} = R\hat{j}$

$(\vec{v}_{P/A})_{rel} = \vec{0} + \omega_2 \hat{k} \times R\hat{j} = -R\omega_2 \hat{i}$

Plug in . . . .

$\vec{v}_P = \vec{v}_A + (\vec{v}_{P/A})_{rel} + \vec{\omega} \times \vec{r}_{P/A}$

$= -L\omega_1 \hat{k} - R\omega_2 \hat{i} + \omega_1 \hat{j} \times R\hat{j} = 0$

$\vec{v}_P = -R\omega_2 \hat{i} - L\omega_1 \hat{k}$ Ans

The answers are the same in the fixed coordinate system.

Find $\vec{a}_P$

$\vec{a}_P = \vec{a}_A + (\vec{a}_{P/A})_{rel} + \vec{\alpha} \times \vec{r}_{P/A}$
$+ \vec{\omega} \times (\vec{\omega} \times \vec{r}_{P/A}) + 2\vec{\omega} \times (\vec{v}_{P/A})_{rel}$

We can find $\vec{a}_A$ using the global XYZ coordinate system

$\vec{a}_A = \vec{a}_O + \vec{\alpha}_{OA} \times \vec{r}_{A/O} + \vec{\omega}_{OA} \times (\vec{\omega}_{OA} \times \vec{r}_{A/O})$

$\vec{\omega}_{OA} = \omega_1 \hat{j}$ then $\vec{\alpha}_{OA} = \vec{0}$

$\vec{a}_O = \vec{0}$, $\vec{r}_{A/O} = L\hat{I}$

$\vec{a}_A = \vec{0} + \vec{0} + \omega_1 \hat{j} \times (\omega_1 \hat{j} \times L\hat{I})$

$a_A = -L\omega_1^2 \hat{I}$

Go back to

$\vec{a}_P = \vec{a}_A + (\vec{a}_{P/A})_{rel} + \vec{\alpha} \times \vec{r}_{P/A} +$
$\vec{\omega} \times (\vec{\omega} \times \vec{r}_{P/A}) + 2\vec{\omega} \times (\vec{v}_{P/A})_{rel}$

identify each term

$\vec{a}_A = -L\omega_1^2 \hat{I}$

$\vec{\omega} = \omega_1 \hat{j}$

$\vec{\alpha} = 0$

$(v_{P/A})_{rel} = -R\omega_2 \hat{i}$

Find $\vec{a}_P$

$\vec{a}_P = \vec{a}_A + (\vec{a}_{P/A})_{rel} + \vec{\alpha} \times \vec{r}_{P/A}$
$+ \vec{\omega} \times (\vec{\omega} \times \vec{r}_{P/A}) + 2\vec{\omega} \times (\vec{v}_{P/A})_{rel}$

We can find $\vec{a}_A$ using the global XYZ coordinate system

$\vec{a}_A = \vec{a}_O + \vec{\alpha}_{OA} \times \vec{r}_{A/O} + \vec{\omega}_{OA} \times (\vec{\omega}_{OA} \times \vec{r}_{A/O})$

$\vec{\omega}_{OA} = \omega_1 \hat{j}$ then $\vec{\alpha}_{OA} = \vec{0}$

$\vec{a}_O = \vec{0}$, $\vec{r}_{A/O} = L\hat{I}$

$\vec{a}_A = \vec{0} + \vec{0} + \omega_1 \hat{j} \times (\omega_1 \hat{j} \times L\hat{I})$

$a_A = -L\omega_1^2 \hat{I}$

Go back to

$\vec{a}_P = \vec{a}_A + (\vec{a}_{P/A})_{rel} + \vec{\alpha} \times \vec{r}_{P/A} +$
$\vec{\omega} \times (\vec{\omega} \times \vec{r}_{P/A}) + 2\vec{\omega} \times (\vec{v}_{P/A})_{rel}$

identify each term

$\vec{a}_A = -L\omega_1^2 \hat{I}$

$\vec{\omega} = \omega_1 \hat{j} + \omega_2 \hat{k}$

$\vec{\alpha} = \omega_1 \omega_2 \hat{j}$

$(v_{P/A})_{rel} = 0$

We need to find $(\vec{a}_{P/A})_{rel}$.

Here we are going to fix point A and treat the disc as a rigid body.

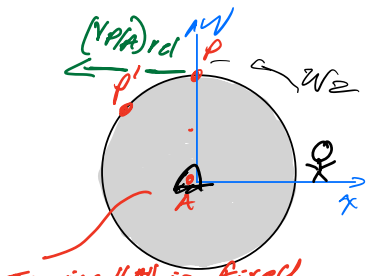

The observer sees point P move to P'

Imagine "A" is fixed

xyz – fixed in OA

$$(\vec{a}_{P/A})_{rel} = a_A)_{xyz} + \vec{\alpha}_2 \times \vec{r}_{P/A} + \vec{\omega}_2 \times (\vec{\omega}_2 \times \vec{r}_{P/A})$$

$(a_A)_{xyz}$ = acceleration of "a" from observer in xyz coordinate system = "0"

$$\vec{\alpha}_2 = \vec{0}, \quad \vec{\omega}_2 = \omega_2 \hat{k}, \quad \vec{r}_{P/A} = R\hat{j}$$

$$(\vec{a}_{P/A})_{rel} = \vec{0} + \vec{0} + \omega_2 \hat{k} \times (\omega_2 \hat{k} \times R\hat{j})$$

$$= -R\omega_2^2 \hat{j}$$

$$\vec{a}_P = \vec{a}_A + (\vec{a}_{P/A})_{rel} + \cancel{\vec{\alpha} \times \vec{r}_{P/A}}^{\,0} + \vec{\omega} \times (\vec{\omega} \times \vec{r}_{P/A}) + 2\vec{\omega} \times (\vec{v}_{P/A})_{rel}$$

$$\vec{a}_P = \vec{a}_A + (\vec{a}_{P/A})_{rel} + \vec{\omega} \times (\vec{\omega} \times \vec{r}_{P/A}) + 2\vec{\omega} \times (\vec{v}_{P/A})_{rel}$$

$$\vec{a}_P = -L\omega_1^2 \hat{i} - R\omega_2^2 \hat{j} + \cancel{-(\omega_1 \hat{j}) \times (\omega_1 \hat{j}) \times R\hat{j}} \to 0 + 2(\omega_1 \hat{j}) \times (-R\omega_2 \hat{i})$$

We need to find $(\vec{a}_{P/A})_{rel}$.

In this coordinate system $(\vec{a}_{P/A})_{rel} = \vec{0}$. The observer doesn't see point P move.

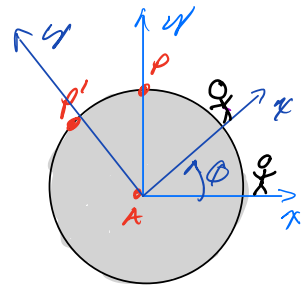

The observer does not see point P moving

$$\vec{a}_P = \cancel{\vec{a}_A}^{\,-L\omega_1^2\hat{i}} + \cancel{(\vec{a}_{P/A})_{rel}}^{\,0} + \cancel{\vec{\alpha}}^{\,\omega_2\omega_1\hat{i}} \times \cancel{\vec{r}_{P/A}}^{\,R\hat{j}} + \cancel{\vec{\omega}}^{\,\omega_1\hat{j}+\omega_2\hat{k}} \times (\cancel{\vec{\omega}}^{\,\omega_1\hat{j}+\omega_2\hat{k}} \times \cancel{\vec{r}_{P/A}}^{\,R\hat{j}}) + 2\cancel{\vec{\omega}}^{\,\omega_1\hat{j}+\omega_2\hat{k}} \times \cancel{(\vec{v}_{P/A})_{rel}}^{\,0}$$

$$\vec{a}_P = -L\omega_1^2 \hat{i} + \vec{0} + \omega_2\omega_1 \hat{i} \times R\hat{j} + (\omega_1 \hat{j} + \omega_2 \hat{k}) \times ((\omega_1 \hat{j} + \omega_2 \hat{k}) \times R\hat{j}) + 2(\omega_1 \hat{j} + \omega_2 \hat{k}) \times \vec{0}$$

$$\vec{a}_P = -L\omega_1^2 \hat{i} + R\omega_2\omega_1 \hat{k} + (\omega_1 \hat{j} + \omega_2 \hat{k}) \times (-R\omega_2 \hat{i})$$

$\hat{k}\ \hat{j}$

$$\vec{a}_P = -L\omega_1^2 \hat{i} + R\omega_2\omega_1 \hat{k} + R\omega_2\omega_1 \hat{k} - R\omega_2^2 \hat{j}$$

$$\vec{a}_P = -L\omega_1^2 \hat{i} - R\omega_2^2 \hat{j} + 2R\omega_2\omega_1 \hat{k}$$

ans

$$\bar{a}_D = -L\omega_1^2\hat{I} - R\omega_2^2\hat{J} + 2R\omega_2\omega_1\hat{K}$$

$$\bar{a}_D = -L\omega_1^2\hat{I} - R\omega_2^2\hat{J} + 2R\omega_2\omega_1\hat{K}$$